CC2500
Low-Cost Low-Power 2.4 GHz RF Transceiver

Applications

- *2400-2483.5 MHz ISM/SRD band systems*
- *Consumer electronics*
- *Wireless game controllers*
- *Wireless audio*
- *Wireless keyboard and mouse*
- *RF enabled remote controls*

Product Description

The **CC2500** is a low-cost 2.4 GHz transceiver designed for very low-power wireless applications. The circuit is intended for the 2400-2483.5 MHz ISM (Industrial, Scientific and Medical) and SRD (Short Range Device) frequency band.

The RF transceiver is integrated with a highly configurable baseband modem. The modem supports various modulation formats and has a configurable data rate up to 500 kBaud.

CC2500 provides extensive hardware support for packet handling, data buffering, burst transmissions, clear channel assessment, link quality indication, and wake-on-radio.

The main operating parameters and the 64-byte transmit/receive FIFOs of **CC2500** can be controlled via an SPI interface. In a typical system, the **CC2500** will be used together with a microcontroller and a few additional passive components.

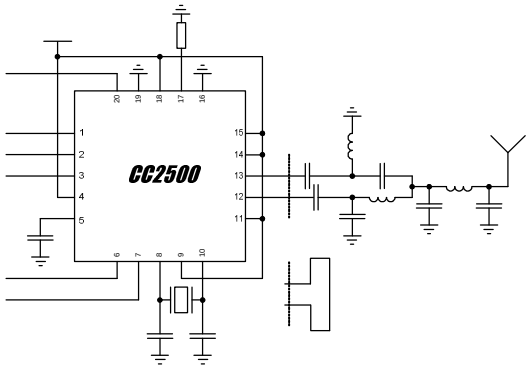

Key Features

RF Performance

- High sensitivity (–104 dBm at 2.4 kBaud, 1% packet error rate)
- Low current consumption (13.3 mA in RX, 250 kBaud, input well above sensitivity limit)
- Programmable output power up to +1 dBm
- Excellent receiver selectivity and blocking performance
- Programmable data rate from 1.2 to 500 kBaud
- Frequency range: 2400 – 2483.5 MHz

Analog Features

- OOK, 2-FSK, GFSK, and MSK supported
- Suitable for frequency hopping and multi-channel systems due to a fast settling frequency synthesizer with 90 us settling time
- Automatic Frequency Compensation (AFC) can be used to align the frequency synthesizer to the received centre frequency
- Integrated analog temperature sensor

Digital Features

- Flexible support for packet oriented systems: On-chip support for sync word detection, address check, flexible packet length, and automatic CRC handling
- Efficient SPI interface: All registers can be programmed with one “burst” transfer
- Digital RSSI output
- Programmable channel filter bandwidth
- Programmable Carrier Sense (CS) indicator

- Programmable Preamble Quality Indicator (PQI) for improved protection against false sync word detection in random noise
- Support for automatic Clear Channel Assessment (CCA) before transmitting (for listen-before-talk systems)
- Support for per-package Link Quality Indication (LQI)
- Optional automatic whitening and de-whitening of data

Low-Power Features

- 400 nA SLEEP mode current consumption
- Fast startup time: 240 us from SLEEP to RX or TX mode (measured on EM design)
- Wake-on-radio functionality for automatic low-power RX polling
- Separate 64-byte RX and TX data FIFOs (enables burst mode data transmission)

General

- Few external components: Complete on-chip frequency synthesizer, no external filters or RF switch needed
- Green package: RoHS compliant and no antimony or bromine
- Small size (QLP 4x4 mm package, 20 pins)
- Suited for systems compliant with EN 300 328 and EN 300 440 class 2 (Europe), FCC CFR47 Part 15 (US), and ARIB STD-T66 (Japan)
- Support for asynchronous and synchronous serial receive/transmit mode for backwards compatibility with existing radio communication protocols

Abbreviations

Abbreviations used in this data sheet are described below.

ACP	Adjacent Channel Power
ADC	Analog to Digital Converter
AFC	Automatic Frequency Offset Compensation
AGC	Automatic Gain Control
AMR	Automatic Meter Reading
ARIB	Association of Radio Industries and Businesses
BER	Bit Error Rate
BT	Bandwidth-Time product
CCA	Clear Channel Assessment
CFR	Code of Federal Regulations
CRC	Cyclic Redundancy Check
CS	Carrier Sense
CW	Continuous Wave (Unmodulated Carrier)
DC	Direct Current
DVGA	Digital Variable Gain Amplifier
ESR	Equivalent Series Resistance
FCC	Federal Communications Commission
FEC	Forward Error Correction
FIFO	First-In-First-Out
FHSS	Frequency Hopping Spread Spectrum
2-FSK	Frequency Shift Keying
GFSK	Gaussian shaped Frequency Shift Keying
IF	Intermediate Frequency
I/Q	In-Phase/Quadrature
ISM	Industrial, Scientific and Medical
LBT	Listen Before Transmit
LC	Inductor-Capacitor
LNA	Low Noise Amplifier
LO	Local Oscillator
LQI	Link Quality Indicator
LSB	Least Significant Bit
MCU	Microcontroller Unit
MSB	Most Significant Bit
MSK	Minimum Shift Keying
NA	Not Applicable
NRZ	Non Return to Zero (Coding)
OOK	On Off Keying
PA	Power Amplifier
PCB	Printed Circuit Board
PD	Power Down
PER	Packet Error Rate
PLL	Phase Locked Loop
POR	Power-on Reset
PQI	Preamble Quality Indicator
PQT	Preamble Quality Threshold
RCOSC	RC Oscillator
QPSK	Quadrature Phase Shift Keying
QLP	Quad Leadless Package
RC	Resistor-Capacitor
RF	Radio Frequency
RSSI	Received Signal Strength Indicator
RX	Receive, Receive Mode
SMD	Surface Mount Device
SNR	Signal to Noise Ratio
SPI	Serial Peripheral Interface
SRD	Short Range Device
T/R	Transmit/Receive
TX	Transmit, Transmit Mode
VCO	Voltage Controlled Oscillator
WLAN	Wireless Local Area Networks
WOR	Wake on Radio, Low power polling
XOSC	Crystal Oscillator
XTAL	Crystal

Table of Contents

APPLICATIONS **1**
PRODUCT DESCRIPTION **1**
KEY FEATURES **1**
RF PERFORMANCE 1
ANALOG FEATURES 1
DIGITAL FEATURES 1
LOW-POWER FEATURES 2
GENERAL 2
ABBREVIATIONS **3**
TABLE OF CONTENTS **4**
1 ABSOLUTE MAXIMUM RATINGS 6
2 OPERATING CONDITIONS 6
3 GENERAL CHARACTERISTICS 6
4 ELECTRICAL SPECIFICATIONS 7
4.1 CURRENT CONSUMPTION 7
4.2 RF RECEIVE SECTION 9
4.3 RF TRANSMIT SECTION 11
4.4 CRYSTAL OSCILLATOR 12
4.5 LOW POWER RC OSCILLATOR 12
4.6 FREQUENCY SYNTHESIZER CHARACTERISTICS 13
4.7 ANALOG TEMPERATURE SENSOR 14
4.8 DC CHARACTERISTICS 14
4.9 POWER-ON RESET 14
5 PIN CONFIGURATION 15
6 CIRCUIT DESCRIPTION 17
7 APPLICATION CIRCUIT 17
8 CONFIGURATION OVERVIEW 19
9 CONFIGURATION SOFTWARE 20
10 4-WIRE SERIAL CONFIGURATION AND DATA INTERFACE 21
10.1 CHIP STATUS BYTE 22
10.2 REGISTER ACCESS 23
10.3 SPI READ 23
10.4 COMMAND STROBES 24
10.5 FIFO ACCESS 24
10.6 PATABLE ACCESS 24
11 MICROCONTROLLER INTERFACE AND PIN CONFIGURATION 25
11.1 CONFIGURATION INTERFACE 25
11.2 GENERAL CONTROL AND STATUS PINS 25
11.3 OPTIONAL RADIO CONTROL FEATURE 26
12 DATA RATE PROGRAMMING 26
13 RECEIVER CHANNEL FILTER BANDWIDTH 27
14 DEMODULATOR, SYMBOL SYNCHRONIZER AND DATA DECISION 27
14.1 FREQUENCY OFFSET COMPENSATION 27
14.2 BIT SYNCHRONIZATION 27
14.3 BYTE SYNCHRONIZATION 28
15 PACKET HANDLING HARDWARE SUPPORT 28
15.1 DATA WHITENING 29
15.2 PACKET FORMAT 29
15.3 PACKET FILTERING IN RECEIVE MODE 31
15.4 CRC CHECK 31
15.5 PACKET HANDLING IN TRANSMIT MODE 32
15.6 PACKET HANDLING IN RECEIVE MODE 32
15.7 PACKET HANDLING IN FIRMWARE 33
16 MODULATION FORMATS 33
16.1 FREQUENCY SHIFT KEYING 33
16.2 MINIMUM SHIFT KEYING 33

16.3 AMPLITUDE MODULATION 34
17 RECEIVED SIGNAL QUALIFIERS AND LINK QUALITY INFORMATION 34
17.1 SYNC WORD QUALIFIER 34
17.2 PREAMBLE QUALITY THRESHOLD (PQT) 34
17.3 RSSI 34
17.4 CARRIER SENSE (CS) 35
17.5 CLEAR CHANNEL ASSESSMENT (CCA) 37
17.6 LINK QUALITY INDICATOR (LQI) 37
18 FORWARD ERROR CORRECTION WITH INTERLEAVING 37
18.1 FORWARD ERROR CORRECTION (FEC) 37
18.2 INTERLEAVING 37
19 RADIO CONTROL 39
19.1 POWER-ON START-UP SEQUENCE 39
19.2 CRYSTAL CONTROL 40
19.3 VOLTAGE REGULATOR CONTROL 40
19.4 ACTIVE MODES 41
19.5 WAKE ON RADIO (WOR) 41
19.6 TIMING 42
19.7 RX TERMINATION TIMER 43
20 DATA FIFO 43
21 FREQUENCY PROGRAMMING 44
22 VCO 45
22.1 VCO AND PLL SELF-CALIBRATION 45
23 VOLTAGE REGULATORS 46
24 OUTPUT POWER PROGRAMMING 46
25 SELECTIVITY 48
26 CRYSTAL OSCILLATOR 50
26.1 REFERENCE SIGNAL 50
27 EXTERNAL RF MATCH 50
28 PCB LAYOUT RECOMMENDATIONS 51
29 GENERAL PURPOSE / TEST OUTPUT CONTROL PINS 52
30 ASYNCHRONOUS AND SYNCHRONOUS SERIAL OPERATION 54
30.1 ASYNCHRONOUS OPERATION 54
30.2 SYNCHRONOUS SERIAL OPERATION 54
31 SYSTEM CONSIDERATIONS AND GUIDELINES 54
31.1 SRD REGULATIONS 54
31.2 FREQUENCY HOPPING AND MULTI-CHANNEL SYSTEMS 55
31.3 WIDEBAND MODULATION NOT USING SPREAD SPECTRUM 55
31.4 DATA BURST TRANSMISSIONS 55
31.5 CONTINUOUS TRANSMISSIONS 55
31.6 CRYSTAL DRIFT COMPENSATION 56
31.7 SPECTRUM EFFICIENT MODULATION 56
31.8 LOW COST SYSTEMS 56
31.9 BATTERY OPERATED SYSTEMS 56
31.10 INCREASING OUTPUT POWER 56
32 CONFIGURATION REGISTERS 57
32.1 CONFIGURATION REGISTER DETAILS – REGISTERS WITH PRESERVED VALUES IN SLEEP STATE 61
32.2 CONFIGURATION REGISTER DETAILS – REGISTERS THAT LOSE PROGRAMMING IN SLEEP STATE 80
32.3 STATUS REGISTER DETAILS 81
33 PACKAGE DESCRIPTION (QFN 20) 85
33.1 RECOMMENDED PCB LAYOUT FOR PACKAGE (QFN 20) 85
33.2 SOLDERING INFORMATION 85
34 ORDERING INFORMATION 86
35 REFERENCES 86
36 GENERAL INFORMATION 88
36.1 DOCUMENT HISTORY 88

1 Absolute Maximum Ratings

Under no circumstances must the absolute maximum ratings given in Table 1 be violated. Stress exceeding one or more of the limiting values may cause permanent damage to the device.



Caution! *ESD sensitive device. Precaution should be used when handling the device in order to prevent permanent damage.*

Parameter	Min	Max	Unit	Condition/Note
Supply voltage	–0.3	3.9	V	All supply pins must have the same voltage
Voltage on any digital pin	–0.3	VDD+0.3, max 3.9	V	
Voltage on the pins RF_P, RF_N and DCOUPL	–0.3	2.0	V	
Voltage ramp-up rate		120	kV/µs	
Input RF level		+10	dBm	
Storage temperature range	–50	150	°C	
Solder reflow temperature		260	°C	According to IPC/JEDEC J-STD-020D
ESD		<500	V	According to JEDEC STD 22, method A114, Human Body Model

Table 1: Absolute Maximum Ratings

2 Operating Conditions

The ***CC2500*** operating conditions are listed in Table 2 below.

Parameter	Min	Max	Unit	Condition/Note
Operating temperature	–40	85	°C	
Operating supply voltage	1.8	3.6	V	All supply pins must have the same voltage

Table 2: Operating Conditions

3 General Characteristics

Parameter	Min	Typ	Max	Unit	Condition/Note
Frequency range	2400		2483.5	MHz	There will be spurious signals at n/2·crystal oscillator frequency (n is an integer number). RF frequencies at n/2·crystal oscillator frequency should therefore be avoided (e.g. 2405, 2418, 2431, 2444, 2457, 2470 and 2483 MHz when using a 26 MHz crystal).
Data rate	1.2		500	kBaud	2-FSK
	1.2		250	kBaud	GFSK and OOK
	26		500	kBaud	(Shaped) MSK (also known as differential offset QPSK)
					Optional Manchester encoding (the data rate in kbps will be half the baud rate).

Table 3: General Characteristics

4 Electrical Specifications

4.1 Current Consumption

Tc = 25°C, VDD = 3.0 V if nothing else stated. All measurement results obtained using the CC2500EM reference design ([4]).

Parameter	Min	Typ	Max	Unit	Condition/Note
Current consumption in power down modes		400		nA	Voltage regulator to digital part off, register values retained (SLEEP state). All GD0 pins programmed to 0x2F (HW to 0)
		900		nA	Voltage regulator to digital part off, register values retained, low-power RC oscillator running (SLEEP state with WOR enabled)
		92		μA	Voltage regulator to digital part off, register values retained, XOSC running (SLEEP state with MCSM0.OSC_FORCE_ON set)
		160		μA	Voltage regulator to digital part on, all other modules in power down (XOFF state)
Current consumption		8.1		μA	Automatic RX polling once each second, using low-power RC oscillator, with 460 kHz filter bandwidth and 250 kBaud data rate, PLL calibration every 4th wakeup. Average current with signal in channel below carrier sense level (MCSM2.RX_TIME_RSSI=1).
		35		μA	Same as above, but with signal in channel *above* carrier sense level, 1.95 ms RX timeout, and no preamble/sync word found.
		1.4		μA	Automatic RX polling every 15th second, using low-power RC oscillator, with 460 kHz filter bandwidth and 250 kBaud data rate, PLL calibration every 4th wakeup. Average current with signal in channel below carrier sense level (MCSM2.RX_TIME_RSSI=1).
		34		μA	Same as above, but with signal in channel *above* carrier sense level, 29.3 ms RX timeout, and no preamble/sync word found.
		1.5		mA	Only voltage regulator to digital part and crystal oscillator running (IDLE state)
		7.4		mA	Only the frequency synthesizer is running (FSTXON state). This current consumption is also representative for the other intermediate states when going from IDLE to RX or TX, including the calibration state.
Current consumption, RX states		17.0		mA	Receive mode, 2.4 kBaud, input at sensitivity limit, MDMCFG2.DEM_DCFILT_OFF=0
		14.5		mA	Receive mode, 2.4 kBaud, input well above sensitivity limit, MDMCFG2.DEM_DCFILT_OFF=0
		17.3		mA	Receive mode, 10 kBaud, input at sensitivity limit, MDMCFG2.DEM_DCFILT_OFF=0
		14.9		mA	Receive mode, 10 kBaud, input well above sensitivity limit, MDMCFG2.DEM_DCFILT_OFF=0
		18.8		mA	Receive mode, 250 kBaud, input at sensitivity limit, MDMCFG2.DEM_DCFILT_OFF=0
		15.7		mA	Receive mode, 250 kBaud, input well above sensitivity limit, MDMCFG2.DEM_DCFILT_OFF=0
		16.6		mA	Receive mode, 250 kBaud current optimized, input at sensitivity limit, MDMCFG2.DEM_DCFILT_OFF=1
		13.3		mA	Receive mode, 250 kBaud current optimized, input well above sensitivity limit, MDMCFG2.DEM_DCFILT_OFF=1
		19.6		mA	Receive mode, 500 kBaud, input at sensitivity limit, MDMCFG2.DEM_DCFILT_OFF=0
		17.0		mA	Receive mode, 500 kBaud, input well above sensitivity limit, MDMCFG2.DEM_DCFILT_OFF=0

Current consumption, TX states		11.1		mA	Transmit mode, –12 dBm output power
		15.0		mA	Transmit mode, -6 dBm output power
		21.2		mA	Transmit mode, 0 dBm output power
		21.5		mA	Transmit mode, +1 dBm output power

Table 4: Current Consumption

4.2 RF Receive Section

Tc = 25°C, VDD = 3.0 V if nothing else stated. All measurement results obtained using the CC2500EM reference design ([4]).

Parameter	Min	Typ	Max	Unit	Condition/Note
Digital channel filter bandwidth	58		812	kHz	User programmable. The bandwidth limits are proportional to crystal frequency (given values assume a 26.0 MHz crystal).
2.4 kBaud data rate, sensitivity optimized, MDMCFG2.DEM_DCFILT_OFF=0 (2-FSK, 1% packet error rate, 20 bytes packet length, 203 kHz digital channel filter bandwidth)					
Receiver sensitivity		–104		dBm	The RX current consumption can be reduced by approximately 1.7 mA by setting MDMCFG2.DEM_DCFILT_OFF=1. The typical sensitivity is then -102 dBm and the temperature range is from 0°C to +85°C. The sensitivity can be improved to typically –106 dBm with MDMCFG2.DEM_DCFILT_OFF=0 by programming registers TEST2 and TEST1 (see page 82). The temperature range is then from 0°C to +85°C.
Saturation		–13		dBm	
Adjacent channel rejection		23		dB	Desired channel 3 dB above the sensitivity limit. 250 kHz channel spacing
Alternate channel rejection		31		dB	Desired channel 3 dB above the sensitivity limit. 250 kHz channel spacing
					See Figure 22 for plot of selectivity versus frequency offset
Blocking					Wanted signal 3 dB above sensitivity level.
±10 MHz offset		64		dBm	Compliant with ETSI EN 300 440 class 2 receiver requirements.
±20 MHz offset		70		dBm	
±50 MHz offset		71		dBm	
10 kBaud data rate, sensitivity optimized, MDMCFG2.DEM_DCFILT_OFF=0 (2-FSK, 1% packet error rate, 20 bytes packet length, 232 kHz digital channel filter bandwidth)					
Receiver sensitivity		–99		dBm	The RX current consumption can be reduced by approximately 1.7 mA by setting MDMCFG2.DEM_DCFILT_OFF=1. The typical sensitivity is then -97 dBm The sensitivity can be improved to typically –101 dBm with MDMCFG2.DEM_DCFILT_OFF=0 by programming registers TEST2 and TEST1 (see page 82). The temperature range is then from 0°C to +85°C.
Saturation		–9		dBm	
Adjacent channel rejection		18		dB	Desired channel 3 dB above the sensitivity limit. 250 kHz channel spacing
Alternate channel rejection		25		dB	Desired channel 3 dB above the sensitivity limit. 250 kHz channel spacing
					See Figure 23 for plot of selectivity versus frequency offset
Blocking					Wanted signal 3 dB above sensitivity level.
±10 MHz offset		59		dB	Compliant with ETSI EN 300 440 class 2 receiver requirements.
±20 MHz offset		65		dB	
±50 MHz offset		66		dB	

Parameter	Min	Typ	Max	Unit	Condition/Note
250 kBaud data rate, sensitivity optimized, `MDMCFG2.DEM_DCFILT_OFF=0` (MSK, 1% packet error rate, 20 bytes packet length, 540 kHz digital channel filter bandwidth)					
Receiver sensitivity		–89		dBm	
Saturation		–13		dBm	
Adjacent channel rejection		21		dB	Desired channel 3 dB above the sensitivity limit. 750 kHz channel spacing
Alternate channel rejection		30		dB	Desired channel 3 dB above the sensitivity limit. 750 kHz channel spacing
					See Figure 24 for plot of selectivity versus frequency offset
Blocking					Wanted signal 3 dB above sensitivity level.
±10 MHz offset		46		dB	Compliant with ETSI EN 300 440 class 2 receiver requirements.
±20 MHz offset		53		dB	
±50 MHz offset		55		dB	
250 kBaud data rate, current optimized, `MDMCFG2.DEM_DCFILT_OFF=1` (MSK, 1% packet error rate, 20 bytes packet length, 540 kHz digital channel filter bandwidth)					
Receiver sensitivity		–87		dBm	
Saturation		–12		dBm	
Adjacent channel rejection		21		dB	Desired channel 3 dB above the sensitivity limit. 750 kHz channel spacing
Alternate channel rejection		30		dB	Desired channel 3 dB above the sensitivity limit. 750 kHz channel spacing
					See Figure 25 for plot of selectivity versus frequency offset
Blocking					Wanted signal 3 dB above sensitivity level.
±10 MHz offset		46		dB	Compliant with ETSI EN 300 440 class 2 receiver requirements.
±20 MHz offset		52		dB	
±50 MHz offset		55		dB	
500 kBaud data rate, `MDMCFG2.DEM_DCFILT_OFF=0` (`MDMCFG2.DEM_DCFILT_OFF=1` cannot be used for data rates >250 kBaud) (MSK, 1% packet error rate, 20 bytes packet length, 812 kHz digital channel filter bandwidth)					
Receiver sensitivity		–83		dBm	
Saturation		–18		dBm	
Adjacent channel rejection		14		dB	Desired channel 3 dB above the sensitivity limit. 1 MHz channel spacing
Alternate channel rejection		25		dB	Desired channel 3 dB above the sensitivity limit. 1 MHz channel spacing
					See Figure 26 for plot of selectivity versus frequency offset
Blocking					Wanted signal 3 dB above sensitivity level.
±10 MHz offset		40		dB	Compliant with ETSI EN 300 440 class 2 receiver requirements.
±20 MHz offset		48		dB	
±50 MHz offset		50		dB	
General					
Spurious emissions					
25 MHz – 1 GHz			–57	dBm	
Above 1 GHz			–47	dBm	
RX latency		9		bit	Serial operation. Time from start of reception until data is available on the receiver data output pin is equal to 9 bit.

Table 5: RF Receive Section

4.3 RF Transmit Section

Tc = 25°C, VDD = 3.0 V, 0 dBm if nothing else stated. All measurement results obtained using the CC2500EM reference design ([4]).

Parameter	Min	Typ	Max	Unit	Condition/Note
Differential load impedance		80 + j74		Ω	Differential impedance as seen from the RF-port (RF_P and RF_N) towards the antenna. Follow the CC2500EM reference design ([4]) available from the TI website.
Output power, highest setting		+1		dBm	Output power is programmable and full range is available across the entire frequency band. Delivered to a 50 Ω single-ended load via CC2500EM reference design ([4]) RF matching network.
Output power, lowest setting		–30		dBm	Output power is programmable and full range is available across the entire frequency band. Delivered to a 50 Ω single-ended load via CC2500EM reference design ([4]) RF matching network. It is possible to program less than -30 dBm output power, but this is not recommended due to large variation in output power across operating conditions and processing corners for these settings.
Occupied bandwidth (99%)		91		kHz	2.4 kBaud, 38.2 kHz deviation, 2-FSK
		117		kHz	10 kBaud, 38.2 kHz deviation, 2-FSK
		296		kHz	250 kBaud, MSK
		489		kHz	500 kBaud, MSK
Adjacent channel power (ACP)		-28		dBc	2.4 kBaud, 38.2 kHz deviation, 2-FSK, 250 kHz channel spacing
		-27		dBc	10 kBaud, 38.2 kHz deviation, 2-FSK, 250 kHz channel spacing
		-22		dBc	250 kBaud, MSK, 750 kHz channel spacing
		-21		dBc	500 kBaud, MSK, 1 MHz channel spacing
Spurious emissions					
25 MHz – 1 GHz			–36	dBm	
47-74, 87.5-118, 174-230, 470-862 MHz			–54	dBm	
1800-1900 MHz			–47	dBm	Restricted band in Europe
At 2·RF and 3·RF			–41	dBm	Restricted bands in USA
Otherwise above 1 GHz			–30	dBm	
TX latency		8		bit	Serial operation. Time from sampling the data on the transmitter data input pin until it is observed on the RF output ports.

Table 6: RF Transmit Section

4.4 Crystal Oscillator

Tc = 25°C, VDD = 3.0 V if nothing else stated.

Parameter	Min	Typ	Max	Unit	Condition/Note
Crystal frequency	26	26	27	MHz	
Tolerance		±40		ppm	This is the total tolerance including a) initial tolerance, b) crystal loading, c) aging, and d) temperature dependence. The acceptable crystal tolerance depends on RF frequency and channel spacing / bandwidth.
ESR			100	Ω	
Start-up time		150		µs	Measured on CC2500EM reference design ([4]) using crystal AT-41CD2 from NDK. This parameter is to a large degree crystal dependent.

Table 7: Crystal Oscillator Parameters

4.5 Low Power RC Oscillator

Tc = 25°C, VDD = 3.0 V if nothing else stated. All measurement results obtained using the CC2500EM reference design ([4]).

Parameter	Min	Typ	Max	Unit	Condition/Note
Calibrated frequency	34.7	34.7	36	kHz	Calibrated RC oscillator frequency is XTAL frequency divided by 750
Frequency accuracy after calibration			-1 / +10	%	The RC oscillator contains an error in the calibration routine that statistically occurs in 17.3% of all calibrations performed. The given maximum accuracy figures account for the calibration error. Refer also to the CC2500 Errata Notes.
Temperature coefficient		+0.4		% / °C	Frequency drift when temperature changes after calibration
Supply voltage coefficient		+3		% / V	Frequency drift when supply voltage changes after calibration
Initial calibration time		2		ms	When the RC oscillator is enabled, calibration is continuously done in the background as long as the crystal oscillator is running.

Table 8: RC Oscillator Parameters

4.6 Frequency Synthesizer Characteristics

Tc = 25°C, VDD = 3.0 V if nothing else stated. All measurement results obtained using the CC2500EM reference design ([4]). Min figures are given using a 27 MHz crystal. Typ and max figures are given using a 26 MHz crystal.

Parameter	Min	Typ	Max	Unit	Condition/Note
Programmed frequency resolution	397	$F_{XOSC}/2^{16}$	412	Hz	26-27 MHz crystal.
Synthesizer frequency tolerance		±40		ppm	Given by crystal used. Required accuracy (including temperature and aging) depends on frequency band and channel bandwidth / spacing.
RF carrier phase noise		–78		dBc/Hz	@ 50 kHz offset from carrier
		–78		dBc/Hz	@ 100 kHz offset from carrier
		–81		dBc/Hz	@ 200 kHz offset from carrier
		–90		dBc/Hz	@ 500 kHz offset from carrier
		–100		dBc/Hz	@ 1 MHz offset from carrier
		–108		dBc/Hz	@ 2 MHz offset from carrier
		–114		dBc/Hz	@ 5 MHz offset from carrier
		–118		dBc/Hz	@ 10 MHz offset from carrier
PLL turn-on / hop time	85.1	88.4	88.4	µs	Time from leaving the IDLE state until arriving in the RX, FSTXON or TX state, when not performing calibration. Crystal oscillator running.
PLL RX/TX settling time	9.3	9.6	9.6	µs	Settling time for the 1·IF frequency step from RX to TX
PLL TX/RX settling time	20.7	21.5	21.5	µs	Settling time for the 1·IF frequency step from TX to RX
PLL calibration time	694	721	721	µs	Calibration can be initiated manually or automatically before entering or after leaving RX/TX.

Table 9: Frequency Synthesizer Parameters

4.7 Analog Temperature Sensor

The characteristics of the analog temperature sensor at 3.0 V supply voltage are listed in Table 10 below. Note that it is necessary to write 0xBF to the PTEST register to use the analog temperature sensor in the IDLE state.

Parameter	Min	Typ	Max	Unit	Condition/Note
Output voltage at –40°C		0.654		V	
Output voltage at 0°C		0.750		V	
Output voltage at +40°C		0.848		V	
Output voltage at +80°C		0.946		V	
Temperature coefficient		2.43		mV/°C	Fitted from –20°C to +80°C
Error in calculated temperature, calibrated	-2 *	0	2 *	°C	From –20°C to +80°C when using 2.43 mV / °C, after 1-point calibration at room temperature * The indicated minimum and maximum error with 1-point calibration is based on measured values for typical process parameters
Current consumption increase when enabled		0.3		mA	

Table 10: Analog Temperature Sensor Parameters

4.8 DC Characteristics

Tc = 25°C if nothing else stated.

Digital Inputs/Outputs	Min	Max	Unit	Condition/Note
Logic "0" input voltage	0	0.7	V	
Logic "1" input voltage	VDD-0.7	VDD	V	
Logic "0" output voltage	0	0.5	V	For up to 4 mA output current
Logic "1" output voltage	VDD-0.3	VDD	V	For up to 4 mA output current
Logic "0" input current	N/A	–50	nA	Input equals 0 V
Logic "1" input current	N/A	50	nA	Input equals VDD

Table 11: DC Characteristics

4.9 Power-On Reset

When the power supply complies with the requirements in Table 12 below, proper Power-On-Reset functionality is guaranteed. Otherwise, the chip should be assumed to have unknown state until transmitting an SRES strobe over the SPI interface. See Section 19.1 on page 39 for further details.

Parameter	Min	Typ	Max	Unit	Condition/Note
Power ramp-up time			5	ms	From 0 V until reaching 1.8 V
Power off time	1			ms	Minimum time between power-on and power-off

Table 12: Power-on Reset Requirements

5 Pin Configuration

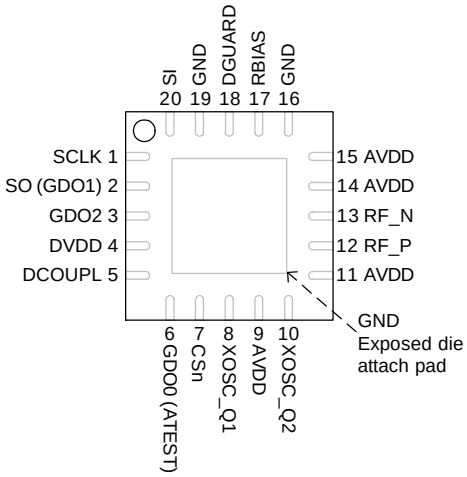

Figure 1: Pinout Top View

Note: The exposed die attach pad **must** be connected to a solid ground plane as this is the main ground connection for the chip.

Pin #	Pin Name	Pin Type	Description
1	SCLK	Digital Input	Serial configuration interface, clock input
2	SO (GDO1)	Digital Output	Serial configuration interface, data output. Optional general output pin when CSn is high
3	GDO2	Digital Output	Digital output pin for general use: • Test signals • FIFO status signals • Clear Channel Indicator • Clock output, down-divided from XOSC • Serial output RX data
4	DVDD	Power (Digital)	1.8 - 3.6 V digital power supply for digital I/O's and for the digital core voltage regulator
5	DCOUPL	Power (Digital)	1.6 - 2.0 V digital power supply output for decoupling. NOTE: This pin is intended for use with the CC2500 only. It can not be used to provide supply voltage to other devices.
6	GDO0 (ATEST)	Digital I/O	Digital output pin for general use: • Test signals • FIFO status signals • Clear Channel Indicator • Clock output, down-divided from XOSC • Serial output RX data • Serial input TX data Also used as analog test I/O for prototype/production testing
7	CSn	Digital Input	Serial configuration interface, chip select
8	XOSC_Q1	Analog I/O	Crystal oscillator pin 1, or external clock input
9	AVDD	Power (Analog)	1.8 - 3.6 V analog power supply connection
10	XOSC_Q2	Analog I/O	Crystal oscillator pin 2
11	AVDD	Power (Analog)	1.8 - 3.6 V analog power supply connection
12	RF_P	RF I/O	Positive RF input signal to LNA in receive mode Positive RF output signal from PA in transmit mode
13	RF_N	RF I/O	Negative RF input signal to LNA in receive mode Negative RF output signal from PA in transmit mode
14	AVDD	Power (Analog)	1.8 - 3.6 V analog power supply connection
15	AVDD	Power (Analog)	1.8 - 3.6 V analog power supply connection
16	GND	Ground (Analog)	Analog ground connection
17	RBIAS	Analog I/O	External bias resistor for reference current
18	DGUARD	Power (Digital)	Power supply connection for digital noise isolation
19	GND	Ground (Digital)	Ground connection for digital noise isolation
20	SI	Digital Input	Serial configuration interface, data input

Table 13: Pinout Overview

6 Circuit Description

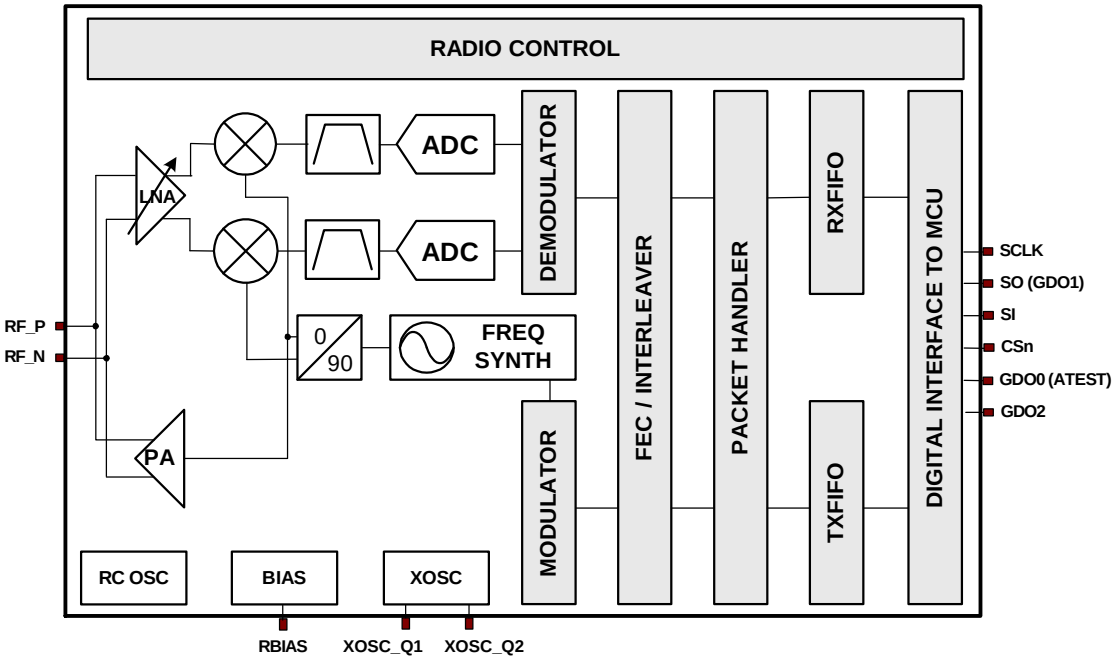

Figure 2: CC2500 Simplified Block Diagram

A simplified block diagram of CC2500 is shown in Figure 2.

CC2500 features a low-IF receiver. The received RF signal is amplified by the low-noise amplifier (LNA) and down-converted in quadrature (I and Q) to the intermediate frequency (IF). At IF, the I/Q signals are digitised by the ADCs. Automatic gain control (AGC), fine channel filtering, demodulation bit/packet synchronization are performed digitally.

The transmitter part of CC2500 is based on direct synthesis of the RF frequency.

The frequency synthesizer includes a completely on-chip LC VCO and a 90 degrees phase shifter for generating the I and Q LO signals to the down-conversion mixers in receive mode.

A crystal is to be connected to XOSC_Q1 and XOSC_Q2. The crystal oscillator generates the reference frequency for the synthesizer, as well as clocks for the ADC and the digital part.

A 4-wire SPI serial interface is used for configuration and data buffer access.

The digital baseband includes support for channel configuration, packet handling, and data buffering.

7 Application Circuit

Only a few external components are required for using the CC2500. The recommended application circuit is shown in Figure 3. The external components are described in Table 14, and typical values are given in Table 15.

Bias Resistor

The bias resistor R171 is used to set an accurate bias current.

Balun and RF Matching

The components between the RF_N/RF_P pins and the point where the two signals are joined together (C122, C132, L121, and L131) form a

balun that converts the differential RF signal on CC2500 to a single-ended RF signal. C121 and C131 are needed for DC blocking. Together with an appropriate LC network, the balun components also transform the impedance to match a 50 Ω antenna (or cable). Suggested values are listed in Table 15.

The balun and LC filter component values and their placement are important to keep the performance optimized. It is highly recommended to follow the CC2500EM reference design ([4]).

Crystal

The crystal oscillator uses an external crystal with two loading capacitors (C81 and C101). See Section 26 on page 50 for details.

Power Supply Decoupling

The power supply must be properly decoupled close to the supply pins. Note that decoupling capacitors are not shown in the application circuit. The placement and the size of the decoupling capacitors are very important to achieve the optimum performance. The CC2500EM reference design ([4]) should be followed closely.

Component	Description
C51	Decoupling capacitor for on-chip voltage regulator to digital part
C81/C101	Crystal loading capacitors, see Section 26 on page 50 for details
C121/C131	RF balun DC blocking capacitors
C122/C132	RF balun/matching capacitors
C123/C124	RF LC filter/matching capacitors
L121/L131	RF balun/matching inductors (inexpensive multi-layer type)
L122	RF LC filter inductor (inexpensive multi-layer type)
R171	Resistor for internal bias current reference
XTAL	26-27 MHz crystal, see Section 26 on page 50 for details

Table 14: Overview of External Components (excluding supply decoupling capacitors)

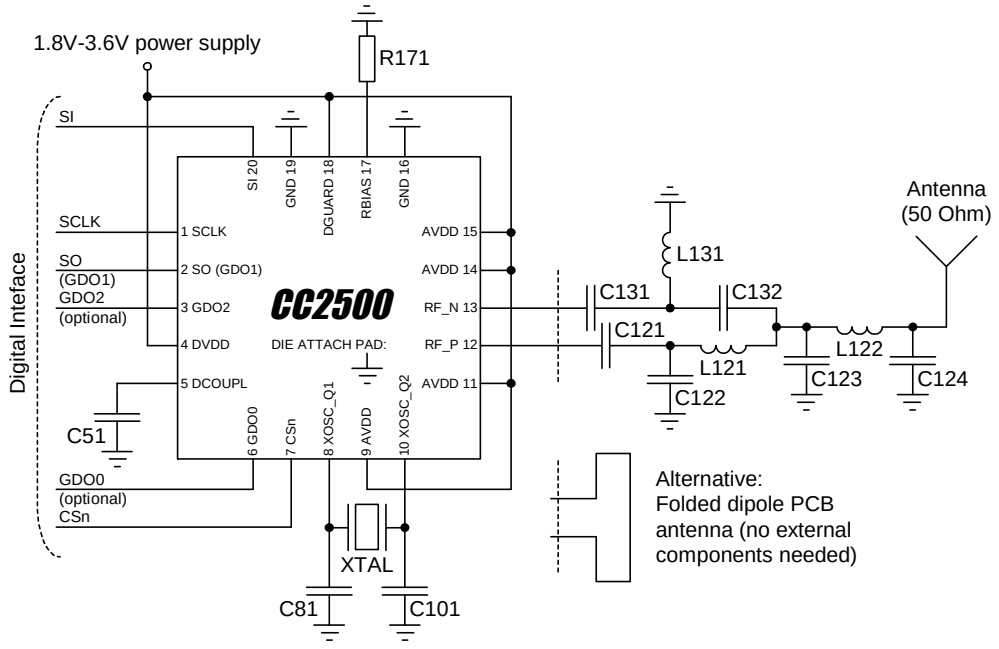

Figure 3: Typical Application and Evaluation Circuit (excluding supply decoupling capacitors)

Component	Value	Manufacturer
C51	100 nF ±10%, 0402 X5R	Murata GRM15 series
C81	27 pF ±5%, 0402 NP0	Murata GRM15 series
C101	27 pF ±5%, 0402 NP0	Murata GRM15 series
C121	100 pF ±5%, 0402 NP0	Murata GRM15 series
C122	1.0 pF ±0.25 pF, 0402 NP0	Murata GRM15 series
C123	1.8 pF ±0.25 pF, 0402 NP0	Murata GRM15 series
C124	1.5 pF ±0.25 pF, 0402 NP0	Murata GRM15 series
C131	100 pF ±5%, 0402 NP0	Murata GRM15 series
C132	1.0 pF ±0.25 pF, 0402 NP0	Murata GRM15 series
L121	1.2 nH ±0.3 nH, 0402 monolithic	Murata LQG15HS series
L122	1.2 nH ±0.3 nH, 0402 monolithic	Murata LQG15HS series
L131	1.2 nH ±0.3 nH, 0402 monolithic	Murata LQG15HS series
R171	56 kΩ ±1%, 0402	Koa RK73 series
XTAL	26.0 MHz surface mount crystal	NDK, AT-41CD2

Table 15: Bill Of Materials for the Application Circuit

Measurements have been performed with multi-layer inductors from other manufacturers (e.g. Würth) and the measurement results were the same as when using the Murata part.

The Gerber files for the CC2500EM reference design ([4]) are available from the TI website.

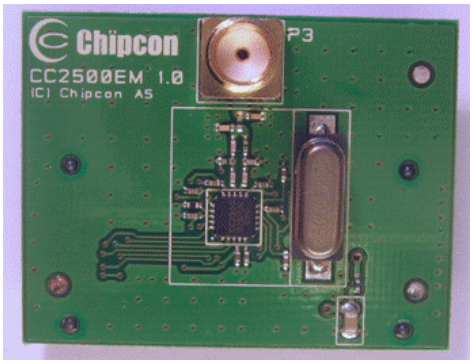

Figure 4: CC2500EM Reference Design ([4])

8 Configuration Overview

CC2500 can be configured to achieve optimum performance for many different applications. Configuration is done using the SPI interface. The following key parameters can be programmed:

- Power-down / power up mode
- Crystal oscillator power-up / power-down
- Receive / transmit mode
- RF channel selection
- Data rate
- Modulation format
- RX channel filter bandwidth
- RF output power
- Data buffering with separate 64-byte receive and transmit FIFOs
- Packet radio hardware support
- Forward Error Correction (FEC) with interleaving
- Data Whitening
- Wake-On-Radio (WOR)

Details of each configuration register can be found in Section 32, starting on page 57.

Figure 5 shows a simplified state diagram that explains the main CC2500 states, together with typical usage and current consumption. For detailed information on controlling the CC2500 state machine, and a complete state diagram, see Section 19, starting on page 39.

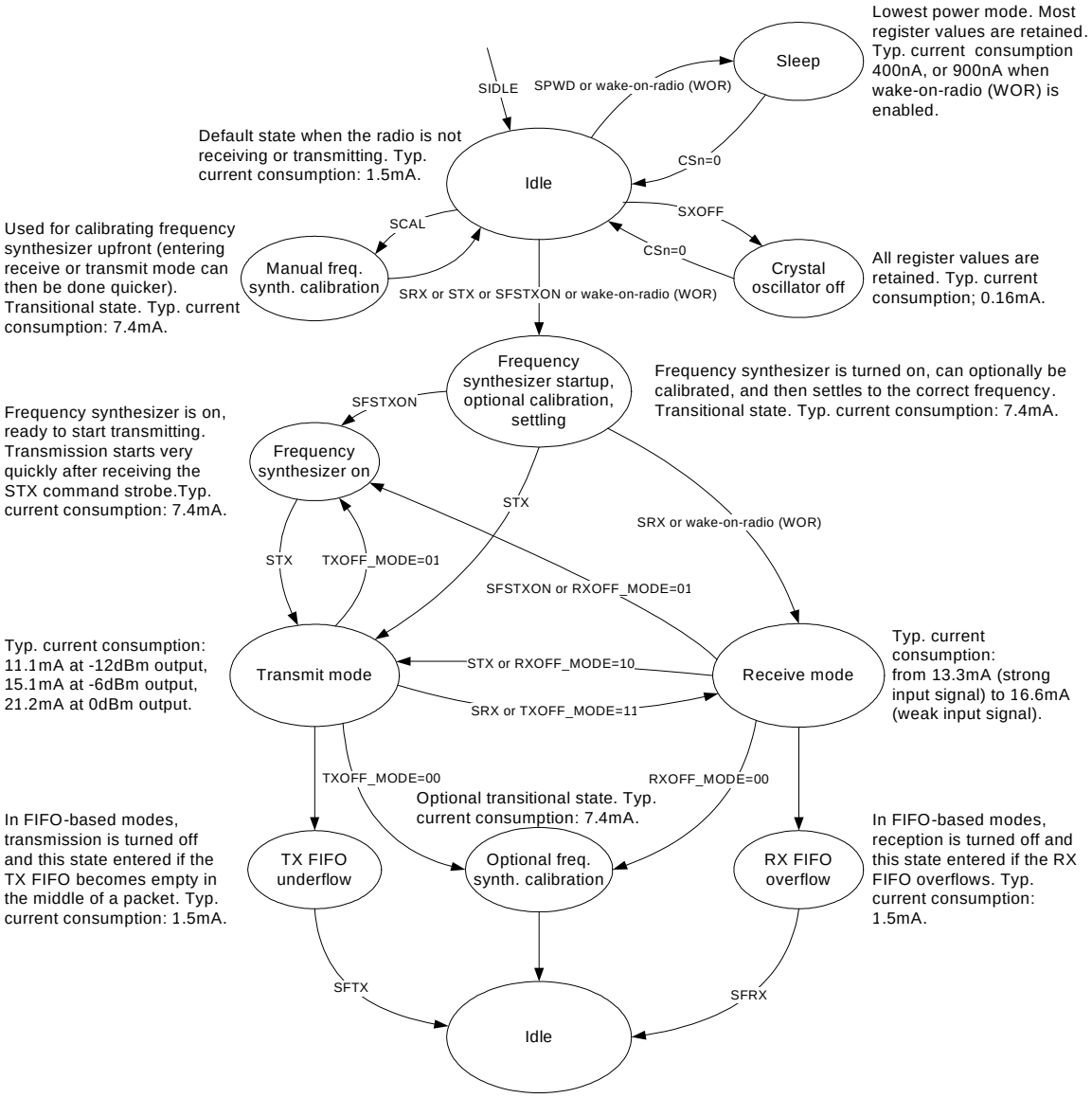

Figure 5: Simplified State Diagram with Typical Usage and Current Consumption at 250 kBaud Data Rate and `MDMCFG2.DEM_DCFILT_OFF=1` (current optimized)

9 Configuration Software

CC2500 can be configured using the SmartRF® Studio software [5]. The SmartRF® Studio software is highly recommended for obtaining optimum register settings, and for evaluating performance and functionality. A screenshot of the SmartRF® Studio user interface for ***CC2500*** is shown in Figure 6.

After chip reset, all the registers have default values as shown in the tables in Section 32. The optimum register setting might differ from the default value. After a reset all registers that shall be different from the default value therefore needs to be programmed through the SPI interface.

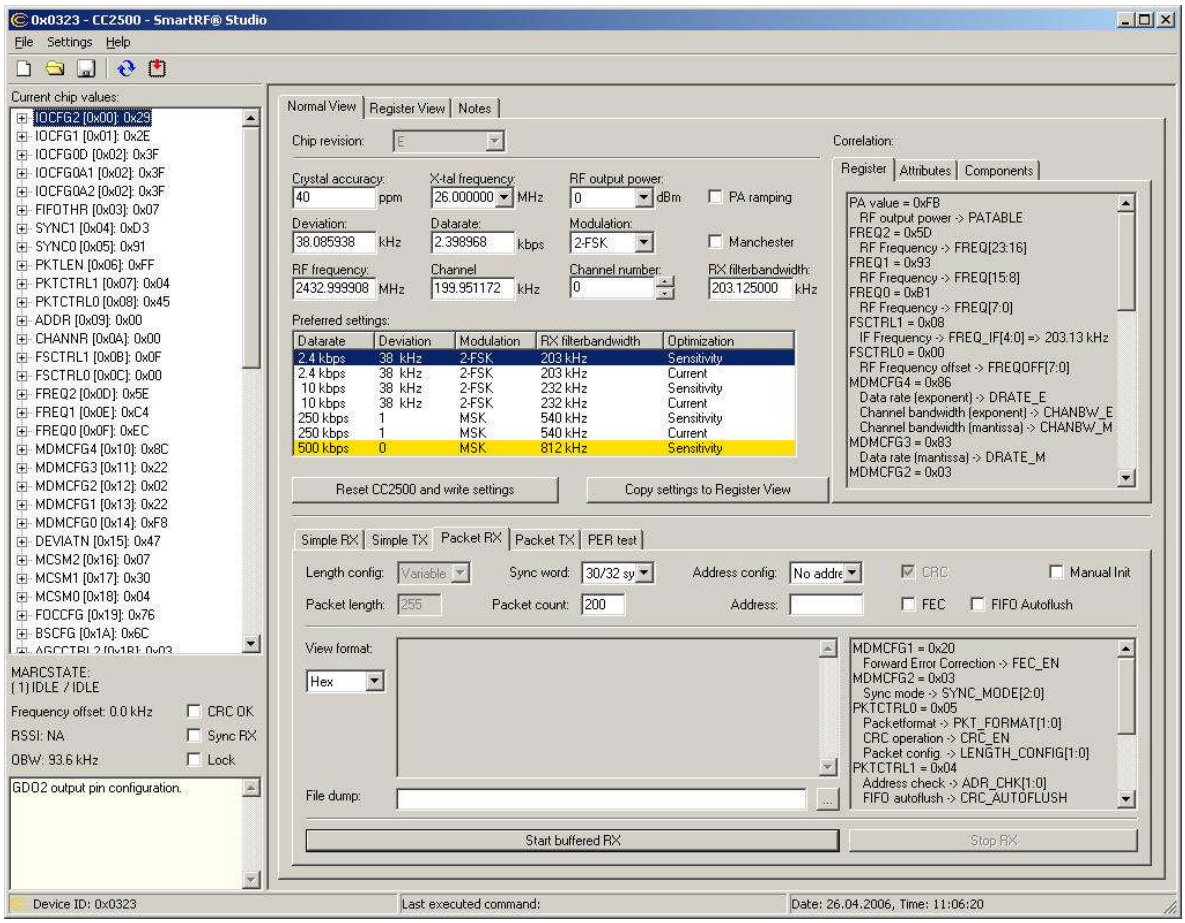

Figure 6: SmartRF® Studio [5] User Interface

10 4-wire Serial Configuration and Data Interface

CC2500 is configured via a simple 4-wire SPI-compatible interface (SI, SO, SCLK and CSn) where ***CC2500*** is the slave. This interface is also used to read and write buffered data. All transfers on the SPI interface are done most significant bit first.

All transactions on the SPI interface start with a header byte containing a R/W bit, a burst access bit (B), and a 6-bit address ($A_5 – A_0$).

The CSn pin must be kept low during transfers on the SPI bus. If CSn goes high during the transfer of a header byte or during read/write from/to a register, the transfer will be cancelled. The timing for the address and data transfer on the SPI interface is shown in Figure 7 with reference to Table 16.

When CSn is pulled low, the MCU must wait until ***CC2500*** SO pin goes low before starting to transfer the header byte. This indicates that the crystal is running. Unless the chip was in the SLEEP or XOFF states, the SO pin will always go low immediately after taking CSn low.

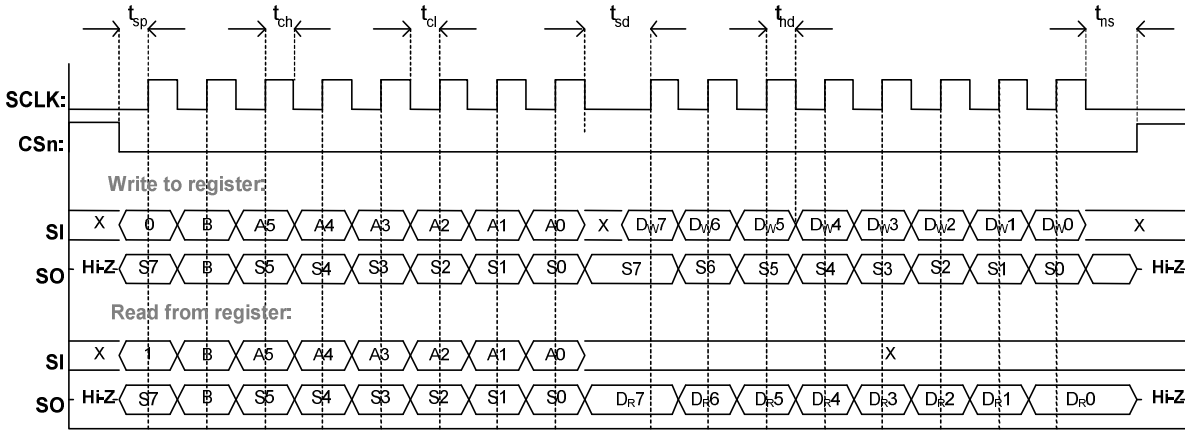

Figure 7: Configuration Register Write and Read Operations

Parameter	Description		Min	Max	Units
f_{SCLK}	SCLK frequency 100 ns delay inserted between address byte and data byte (single access), or between address and data, and between each data byte (burst access).		-	10	MHz
	SCLK frequency, single access No delay between address and data byte			9	MHz
	SCLK frequency, burst access No delay between address and data byte, or between data bytes			6.5	MHz
$t_{sp,pd}$	CSn low to positive edge on SCLK, in power-down mode		150		µs
t_{sp}	CSn low to positive edge on SCLK, in active mode		20	-	ns
t_{ch}	Clock high		50	-	ns
t_{cl}	Clock low		50	-	ns
t_{rise}	Clock rise time		-	5	ns
t_{fall}	Clock fall time		-	5	ns
t_{sd}	Setup data (negative SCLK edge) to positive edge on SCLK (t_{sd} applies between address and data bytes, and between data bytes)	Single access	55	-	ns
		Burst access	76	-	ns
t_{hd}	Hold data after positive edge on SCLK		20	-	ns
t_{ns}	Negative edge on SCLK to CSn high		20	-	ns

Table 16: SPI Interface Timing Requirements

Note: The minimum $t_{sp,pd}$ figure in Table 16 can be used in cases where the user does not read the CHIP_RDYn signal. CSn low to positive edge on SCLK when the chip is woken from power-down depends on the start-up time of the crystal being used. The 150 us in Table 16 is the crystal oscillator start-up time measured on CC2500EM reference design ([4]) using crystal AT-41CD2 from NDK.

10.1 Chip Status Byte

When the header byte, data byte or, command strobe is sent on the SPI interface, the chip status byte is sent by the ***CC2500*** on the SO pin. The status byte contains key status signals, useful for the MCU. The first bit, s7, is the CHIP_RDYn signal; this signal must go low before the first positive edge of SCLK. The CHIP_RDYn signal indicates that the crystal is running.

Bits 6, 5, and 4 comprise the STATE value. This value reflects the state of the chip. The XOSC and power to the digital core is on in the IDLE state, but all other modules are in power down. The frequency and channel

configuration should only be updated when the chip is in this state. The RX state will be active when the chip is in receive mode. Likewise, TX is active when the chip is transmitting.

The last four bits (3:0) in the status byte contains FIFO_BYTES_AVAILABLE. For read operations (the R/W bit in the header byte is set to 1), the FIFO_BYTES_AVAILABLE field contains the number of bytes available for reading from the RX FIFO. For write operations (the R/W bit in the header byte is set to 0), the FIFO_BYTES_AVAILABLE field contains the number of bytes that can be written to the TX FIFO. When FIFO_BYTES_AVAILABLE=15, 15 or more bytes are available/free.

Table 17 gives a status byte summary.

<table>
<tr><th>Bits</th><th>Name</th><th>Description</th></tr>
<tr><td>7</td><td>CHIP_RDYn</td><td>Stays high until power and crystal have stabilized. Should always be low when using the SPI interface.</td></tr>
<tr><td>6:4</td><td>STATE[2:0]</td><td>Indicates the current main state machine mode
<table>
<tr><th>Value</th><th>State</th><th>Description</th></tr>
<tr><td>000</td><td>IDLE</td><td>Idle state
(Also reported for some transitional states instead of SETTLING or CALIBRATE)</td></tr>
<tr><td>001</td><td>RX</td><td>Receive mode</td></tr>
<tr><td>010</td><td>TX</td><td>Transmit mode</td></tr>
<tr><td>011</td><td>FSTXON</td><td>Frequency synthesizer is on, ready to start transmitting</td></tr>
<tr><td>100</td><td>CALIBRATE</td><td>Frequency synthesizer calibration is running</td></tr>
<tr><td>101</td><td>SETTLING</td><td>PLL is settling</td></tr>
<tr><td>110</td><td>RXFIFO_OVERFLOW</td><td>RX FIFO has overflowed. Read out any useful data, then flush the FIFO with SFRX</td></tr>
<tr><td>111</td><td>TXFIFO_UNDERFLOW</td><td>TX FIFO has underflowed. Acknowledge with SFTX</td></tr>
</table></td></tr>
<tr><td>3:0</td><td>FIFO_BYTES_AVAILABLE[3:0]</td><td>The number of bytes available in the RX FIFO or free bytes in the TX FIFO</td></tr>
</table>

Table 17: Status Byte Summary

10.2 Register Access

The configuration registers of the ***CC2500*** are located on SPI addresses from 0x00 to 0x2E. Table 35 on page 58 lists all configuration registers. It is highly recommended to use SmartRF® Studio [5] to generate optimum register settings. The detailed description of each register is found in Section 32.1, starting on page 61. All configuration registers can be both written to and read. The R/W bit controls if the register should be written to or read. When writing to registers, the status byte is sent on the SO pin each time a header byte or data byte is transmitted on the SI pin. When reading from registers, the status byte is sent on the SO pin each time a header byte is transmitted on the SI pin.

Registers with consecutive addresses can be accessed in an efficient way by setting the burst bit (B) in the header byte. The address bits (A_5 – A_0) set the start address in an internal address counter. This counter is incremented by one each new byte (every 8 clock pulses). The burst access is either a read or a write access and must be terminated by setting CSn high.

For register addresses in the range 0x30-0x3D, the burst bit is used to select between status registers, burst bit is one, and command strobes, burst bit is zero (see Section 10.4 below). Because of this, burst access is not available for status registers and they must be accessed one at a time. The status registers can only be read.

10.3 SPI Read

When reading register fields over the SPI interface while the register fields are updated

by the radio hardware (e.g. MARCSTATE or TXBYTES), there is a small, but finite, probability that a single read from the register is being corrupt. As an example, the probability of any single read from TXBYTES being corrupt, assuming the maximum data rate is used, is approximately 80 ppm. Refer to the CC2500 Errata Notes [1] for more details.

10.4 Command Strobes

Command strobes may be viewed as single byte instructions to CC2500. By addressing a command strobe register, internal sequences will be started. These commands are used to disable the crystal oscillator, enable receive mode, enable wake-on-radio etc. The 13 command strobes are listed in Table 34 on page 57.

The command strobe registers are accessed by transferring a single header byte (no data is being transferred). That is, only the R/W bit, the burst access bit (set to 0), and the six address bits (in the range 0x30 through 0x3D) are written. The R/W bit can be either one or zero and will determine how the FIFO_BYTES_AVAILABLE field in the status byte should be interpreted.

When writing command strobes, the status byte is sent on the SO pin.

A command strobe may be followed by any other SPI access without pulling CSn high. However, if an SRES strobe is being issued, one will have to wait for SO to go low again before the next header byte can be issued as shown in Figure 8. The command strobes are executed immediately, with the exception of the SPWD and the SXOFF strobes that are executed when CSn goes high.

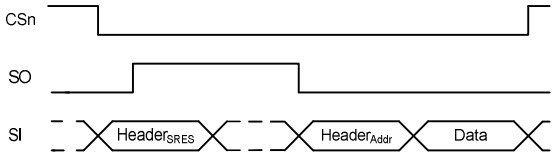

Figure 8: SRES Command Strobe

10.5 FIFO Access

The 64-byte TX FIFO and the 64-byte RX FIFO are accessed through the 0x3F address. When the R/W bit is zero, the TX FIFO is accessed, and the RX FIFO is accessed when the R/W bit is one.

The TX FIFO is write-only, while the RX FIFO is read-only.

The burst bit is used to determine if the FIFO access is a single byte access or a burst access. The single byte access method expects a header byte with the burst bit set to zero and one data byte. After the data byte a new header byte is expected; hence, CSn can remain low. The burst access method expects one header byte and then consecutive data bytes until terminating the access by setting CSn high.

The following header bytes access the FIFOs:

- 0x3F: Single byte access to TX FIFO
- 0x7F: Burst access to TX FIFO
- 0xBF: Single byte access to RX FIFO
- 0xFF: Burst access to RX FIFO

When writing to the TX FIFO, the status byte (see Section 10.1) is output for each new data byte on SO, as shown in Figure 7. This status byte can be used to detect TX FIFO underflow while writing data to the TX FIFO. Note that the status byte contains the number of bytes free *before* writing the byte in progress to the TX FIFO. When the last byte that fits in the TX FIFO is transmitted on SI, the status byte received concurrently on SO will indicate that one byte is free in the TX FIFO.

The TX FIFO may be flushed by issuing a SFTX command strobe. Similarly, a SFRX command strobe will flush the RX FIFO. A SFTX or SFRX command strobe can only be issued in the IDLE, TXFIFO_UNDERLOW or RXFIFO_OVERFLOW states. Both FIFOs are flushed when going to the SLEEP state.

Figure 9 gives a brief overview of different register access types possible.

10.6 PATABLE Access

The 0x3E address is used to access the PATABLE, which is used for selecting PA power control settings. The PATABLE is an 8-byte table, but not all entries into this table are used. The entries to use are selected by the 3-bit value FREND0.PA_POWER.

- When using 2-FSK, GFSK, or MSK modulation only the first entry into this table is used (index 0).

- When using OOK modulation the first two entries into this table are used (index 0 and index 1).

Since the PATABLE is an 8-byte table, the table is written and read from the lowest setting (0) to the highest (7), one byte at a time. An index counter is used to control the access to the table. This counter is incremented each time a byte is read or written to the table, and set to the lowest index when CSn is high. When the highest value is reached the counter restarts at 0.

The access to the PATABLE is either single byte or burst access depending on the burst bit. When using burst access the index counter will count up; when reaching 7 the counter will restart at 0. The R/W bit controls whether the access is a write access (R/W=0) or a read access (R/W=1).

If one byte is written to the PATABLE and this value is to be read out then CSn must be set high before the read access in order to set the index counter back to zero.

Note that the content of the PATABLE is lost when entering the SLEEP state, except for the first byte (index 0).

See Section 24 on page 46 for output power programming details.

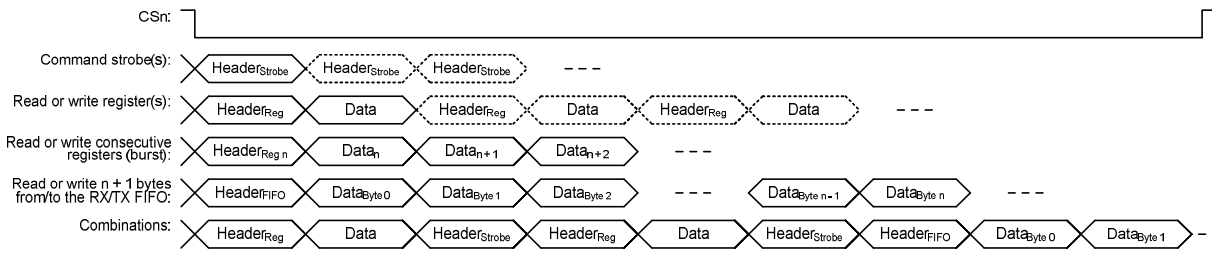

Figure 9: Register Access Types

11 Microcontroller Interface and Pin Configuration

In a typical system, ***CC2500*** will interface to a microcontroller. This microcontroller must be able to:

- Program ***CC2500*** into different modes
- Read and write buffered data
- Read back status information via the 4-wire SPI-bus configuration interface (SI, SO, SCLK and CSn)

11.1 Configuration Interface

The microcontroller uses four I/O pins for the SPI configuration interface (SI, SO, SCLK and CSn). The SPI is described in Section 10 on page 21.

11.2 General Control and Status Pins

The ***CC2500*** has two dedicated configurable pins (GDO0 and GDO2) and one shared pin (GDO1) that can output internal status information useful for control software. These pins can be used to generate interrupts on the MCU. See Section 28 on page 51 for more details on the signals that can be programmed. GDO1 is shared with the SO pin in the SPI interface. The default setting for GDO1/SO is 3-state output. By selecting any other of the programming options the GDO1/SO pin will become a generic pin. When CSn is low, the pin will always function as a normal SO pin.

In the synchronous and asynchronous serial modes, the GDO0 pin is used as a serial TX data input pin while in transmit mode.

The GDO0 pin can also be used for an on-chip analog temperature sensor. By measuring the voltage on the GDO0 pin with an external ADC, the temperature can be calculated. Specifications for the temperature sensor are found in Section 4.7 on page 14.

With default PTEST register setting (0x7F) the temperature sensor output is only available when the frequency synthesizer is enabled (e.g. the MANCAL, FSTXON, RX and TX states). It is necessary to write 0xBF to the PTEST register to use the analog temperature sensor in the IDLE state. Before leaving the IDLE state, the PTEST register should be restored to its default value (0x7F).

11.3 Optional Radio Control Feature

The ***CC2500*** has an optional way of controlling the radio, by reusing SI, SCLK and CSn from the SPI interface. This feature allows for a simple three-pin control of the major states of the radio: SLEEP, IDLE, RX and TX.

This optional functionality is enabled with the MCSM0.PIN_CTRL_EN configuration bit.

State changes are commanded as follows: When CSn is high the SI and SCLK is set to the desired state according to Table 18. When CSn goes low the state of SI and SCLK is latched and a command strobe is generated internally according to the control coding. It is only possible to change state with this functionality. That means that for instance RX will not be restarted if SI and SCLK are set to RX and CSn toggles. When CSn is low the SI and SCLK has normal SPI functionality.

All pin control command strobes are executed immediately, except the SPWD strobe, which is delayed until CSn goes high.

CSn	SCLK	SI	Function
1	X	X	Chip unaffected by SCLK/SI
↓	0	0	Generates SPWD strobe
↓	0	1	Generates STX strobe
↓	1	0	Generates SIDLE strobe
↓	1	1	Generates SRX strobe
0	SPI mode	SPI mode	SPI mode (wakes up into IDLE if in SLEEP/XOFF)

Table 18: Optional Pin Control Coding

12 Data Rate Programming

The data rate used when transmitting, or the data rate expected in receive is programmed by the MDMCFG3.DRATE_M and the MDMCFG4.DRATE_E configuration registers. The data rate is given by the formula below. As the formula shows, the programmed data rate depends on the crystal frequency.

$$R_{DATA} = \frac{(256 + DRATE_M) \cdot 2^{DRATE_E}}{2^{28}} \cdot f_{XOSC}$$

The following approach can be used to find suitable values for a given data rate:

$$DRATE_E = \left\lfloor \log_2 \left(\frac{R_{DATA} \cdot 2^{20}}{f_{XOSC}} \right) \right\rfloor$$

$$DRATE_M = \frac{R_{DATA} \cdot 2^{28}}{f_{XOSC} \cdot 2^{DRATE_E}} - 256$$

If DRATE_M is rounded to the nearest integer and becomes 256, increment DRATE_E and use DRATE_M=0.

The data rate can be set from 1.2 kBaud to 500 kBaud with the minimum step size of:

Min Data Rate [kBaud]	Typical Data Rate [kBaud]	Max Data Rate [kBaud]	Data Rate Step Size [kBaud]
0.8	1.2/2.4	3.17	0.0062
3.17	4.8	6.35	0.0124
6.35	9.6	12.7	0.0248
12.7	19.6	25.4	0.0496
25.4	38.4	50.8	0.0992
50.8	76.8	101.6	0.1984
101.6	153.6	203.1	0.3967
203.1	250	406.3	0.7935
406.3	500	500	1.5869

Table 19: Data Rate Step Size

13 Receiver Channel Filter Bandwidth

In order to meet different channel width requirements, the receiver channel filter is programmable. The MDMCFG4.CHANBW_E and MDMCFG4.CHANBW_M configuration registers control the receiver channel filter bandwidth, which scales with the crystal oscillator frequency. The following formula gives the relation between the register settings and the channel filter bandwidth:

$$BW_{channel} = \frac{f_{XOSC}}{8 \cdot (4 + CHANBW_M) \cdot 2^{CHANBW_E}}$$

For best performance, the channel filter bandwidth should be selected so that the signal bandwidth occupies at most 80% of the channel filter bandwidth. The channel centre tolerance due to crystal accuracy should also be subtracted from the signal bandwidth. The following example illustrates this:

With the channel filter bandwidth set to 600 kHz, the signal should stay within 80% of 600 kHz, which is 480 kHz. Assuming 2.44 GHz frequency and ±20 ppm frequency uncertainty for both the transmitting device and the receiving device, the total frequency uncertainty is ±40 ppm of 2.44 GHz, which is ±98 kHz. If the whole transmitted signal bandwidth is to be received within 480 kHz, the transmitted signal bandwidth should be maximum 480 kHz – 2·98 kHz, which is 284 kHz.

The **CC2500** supports the following channel filter bandwidths:

MDMCFG4. CHANBW_M	MDMCFG4.CHANBW_E			
	00	01	10	11
00	812	406	203	102
01	650	325	162	81
10	541	270	135	68
11	464	232	116	58

Table 20: Channel Filter Bandwidths [kHz] (assuming a 26 MHz crystal)

14 Demodulator, Symbol Synchronizer and Data Decision

CC2500 contains an advanced and highly configurable demodulator. Channel filtering and frequency offset compensation is performed digitally. To generate the RSSI level (see Section 17.3 for more information) the signal level in the channel is estimated. Data filtering is also included for enhanced performance.

14.1 Frequency Offset Compensation

When using 2-FSK, GFSK, or MSK modulation, the demodulator will compensate for the offset between the transmitter and receiver frequency, within certain limits, by estimating the centre of the received data. This value is available in the FREQEST status register. Writing the value from FREQEST into FSCTRL0.FREQOFF the frequency synthesizer is automatically adjusted according to the estimated frequency offset.

The tracking range of the algorithm is selectable as fractions of the channel bandwidth with the FOCCFG.FOC_LIMIT configuration register.

If the FOCCFG.FOC_BS_CS_GATE bit is set, the offset compensator will freeze until carrier sense asserts. This may be useful when the radio is in RX for long periods with no traffic, since the algorithm may drift to the boundaries when trying to track noise.

The tracking loop has two gain factors, which affects the settling time and noise sensitivity of the algorithm. FOCCFG.FOC_PRE_K sets the gain before the sync word is detected, and FOCCFG.FOC_POST_K selects the gain after the sync word has been found.

Note that frequency offset compensation is not supported for OOK modulation.

14.2 Bit Synchronization

The bit synchronization algorithm extracts the clock from the incoming symbols. The algorithm requires that the expected data rate is programmed as described in Section 12 on page 26. Re-synchronization is performed continuously to adjust for error in the incoming symbol rate.

14.3 Byte Synchronization

Byte synchronization is achieved by a continuous sync word search. The sync word is a 16 bit configurable field (can be repeated to get a 32 bit) that is automatically inserted at the start of the packet by the modulator in transmit mode. The demodulator uses this field to find the byte boundaries in the stream of bits. The sync word will also function as a system identifier, since only packets with the correct predefined sync word will be received if the sync word detection in RX is enabled in register MDMCFG2 (see Section 17.1). The sync word detector correlates against the user-configured 16 or 32 bit sync word. The correlation threshold can be set to 15/16, 16/16, or 30/32 bits match. The sync word can be further qualified using the preamble quality indicator mechanism described below and/or a carrier sense condition. The sync word is configured through the SYNC1 and SYNC0 registers.

In order to make false detections of sync words less likely, a mechanism called preamble quality indication (PQI) can be used to qualify the sync word. A threshold value for the preamble quality must be exceeded in order for a detected sync word to be accepted. See Section 17.2 on page 34 for more details.

15 Packet Handling Hardware Support

The *CC2500* has built-in hardware support for packet oriented radio protocols.

In transmit mode, the packet handler can be configured to add the following elements to the packet stored in the TX FIFO:

- A programmable number of preamble bytes
- A two byte synchronization (sync) word. Can be duplicated to give a 4-byte sync word (recommended). It is not possible to only insert preamble or only insert a sync word.
- A CRC checksum computed over the data field

The recommended setting is 4-byte preamble and 4-byte sync word, except for 500 kBaud data rate where the recommended preamble length is 8 bytes.

In addition, the following can be implemented on the data field and the optional 2-byte CRC checksum:

- Whitening of the data with a PN9 sequence.
- Forward error correction by the use of interleaving and coding of the data (convolutional coding).

In receive mode, the packet handling support will de-construct the data packet by implementing the following (if enabled):

- Preamble detection
- Sync word detection
- CRC computation and CRC check
- One byte address check
- Packet length check (length byte checked against a programmable maximum length)
- De-whitening
- De-interleaving and decoding

Optionally, two status bytes (see Table 21 and Table 22) with RSSI value, Link Quality Indication, and CRC status can be appended in the RX FIFO.

Bit	Field Name	Description
7:0	RSSI	RSSI value

Table 21: Received Packet Status Byte 1 (first byte appended after the data)

Bit	Field Name	Description
7	CRC_OK	1: CRC for received data OK (or CRC disabled) 0: CRC error in received data
6:0	LQI	The Link Quality Indicator estimates how easily a received signal can be demodulated

Table 22: Received Packet Status Byte 2 (second byte appended after the data)

Note that register fields that control the packet handling features should only be altered when *CC2500* is in the IDLE state.

15.1 Data Whitening

From a radio perspective, the ideal over the air data are random and DC free. This results in the smoothest power distribution over the occupied bandwidth. This also gives the regulation loops in the receiver uniform operation conditions (no data dependencies).

Real world data often contain long sequences of zeros and ones. Performance can then be improved by whitening the data before transmitting, and de-whitening the data in the receiver. With **CC2500**, this can be done automatically by setting PKTCTRL0.WHITE_DATA=1. All data, except the preamble and the sync word, are then XOR-ed with a 9-bit pseudo-random (PN9) sequence before being transmitted as shown in Figure 10. At the receiver end, the data are XOR-ed with the same pseudo-random sequence. This way, the whitening is reversed, and the original data appear in the receiver. The PN9 sequence is reset to all 1's.

Data whitening can only be used when PKTCTRL0.CC2400_EN=0 (default).

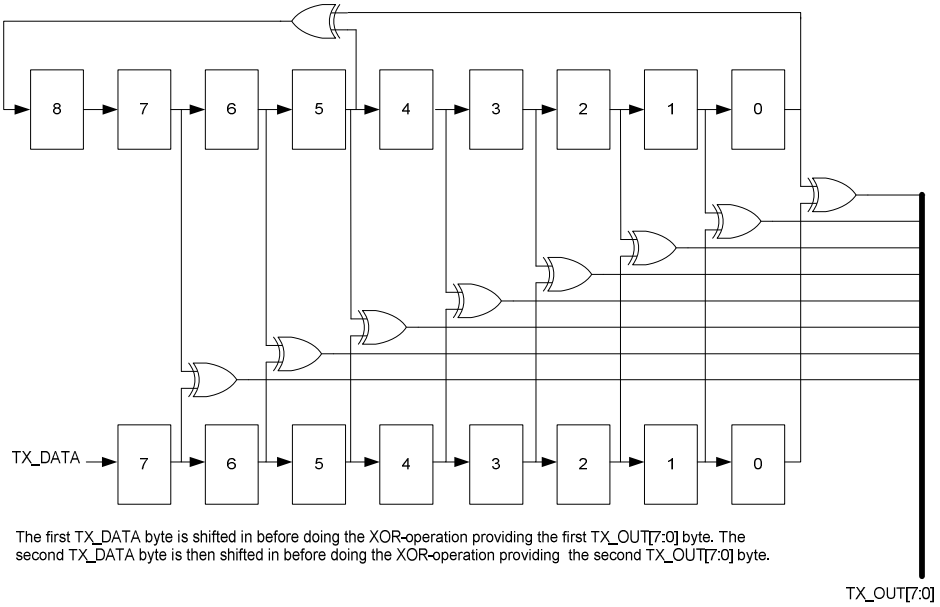

Figure 10: Data Whitening in TX Mode

15.2 Packet Format

The format of the data packet can be configured and consists of the following items (see Figure 11):

- Preamble
- Synchronization word
- Length byte or constant programmable packet length
- Optional address byte
- Payload
- Optional 2 byte CRC

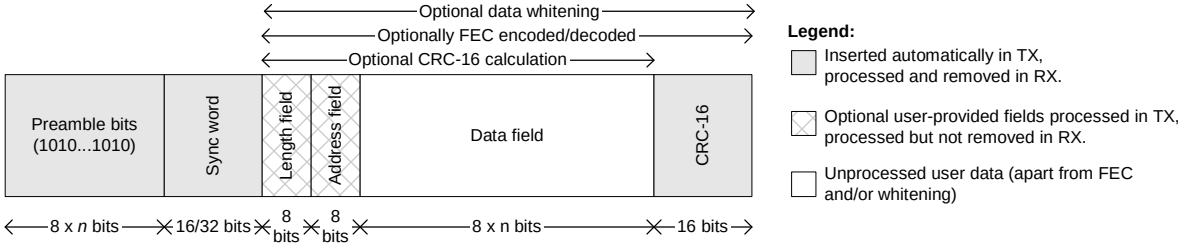

Figure 11: Packet Format

The preamble pattern is an alternating sequence of ones and zeros (101010101…). The minimum length of the preamble is programmable. When enabling TX, the modulator will start transmitting the preamble. When the programmed number of preamble bytes has been transmitted, the modulator will send the sync word and then data from the TX FIFO if data is available. If the TX FIFO is empty, the modulator will continue to send preamble bytes until the first byte is written to the TX FIFO. The modulator will then send the sync word and then the data bytes. The number of preamble bytes is programmed with the MDMCFG1.NUM_PREAMBLE value.

The synchronization word is a two-byte value set in the SYNC1 and SYNC0 registers. The sync word provides byte synchronization of the incoming packet. A one-byte sync word can be emulated by setting the SYNC1 value to the preamble pattern. It is also possible to emulate a 32 bit sync word by using MDMCFG2.SYNC_MODE=3 or 7. The sync word will then be repeated twice.

CC2500 supports both fixed packet length protocols and variable packet length protocols. Variable or fixed packet length mode can be used for packets up to 255 bytes. For longer packets, infinite packet length mode must be used.

Fixed packet length mode is selected by setting PKTCTRL0.LENGTH_CONFIG=0. The desired packet length is set by the PKTLEN register.

In variable packet length mode, PKTCTRL0.LENGTH_CONFIG=1, the packet length is configured by the first byte after the sync word. The packet length is defined as the payload data, excluding the length byte and the optional CRC. The PKTLEN register is used to set the maximum packet length allowed in RX. Any packet received with a length byte with a value greater than PKTLEN will be discarded.

With PKTCTRL0.LENGTH_CONFIG=2, the packet length is set to infinite and transmission and reception will continue until turned off manually. As described in the next section, this can be used to support packet formats with different length configuration than natively supported by CC2500. One should make sure that TX mode is not turned off during the transmission of the first half of any byte. Refer to the CC2500 Errata Notes [1] for more details.

Note that the minimum packet length supported (excluding the optional length byte and CRC) is one byte of payload data.

15.2.1 Arbitrary Length Field Configuration

The packet length register, PKTLEN, can be reprogrammed during receive and transmit. In combination with fixed packet length mode (PKTCTRL0.LENGTH_CONFIG=0) this opens the possibility to have a different length field configuration than supported for variable length packets (in variable packet length mode the length byte is the first byte after the sync word). At the start of reception, the packet length is set to a large value. The MCU reads out enough bytes to interpret the length field in the packet. Then the PKTLEN value is set according to this value. The end of packet will occur when the byte counter in the packet handler is equal to the PKTLEN register. Thus, the MCU must be able to program the correct length, before the internal counter reaches the packet length.

15.2.2 Packet Length > 256 bytes

Also the packet automation control register, PKTCTRL0, can be reprogrammed during TX and RX. This opens the possibility to transmit and receive packets that are longer than 256 bytes and still be able to use the packet handling hardware support. At the start of the packet, the infinite packet length mode (PKTCTRL0.LENGTH_CONFIG=2) must be active. On the TX side, the PKTLEN register is set to mod(length,256). On the RX side the MCU reads out enough bytes to interpret the length field in the packet and sets the PKTLEN register to mod(length,256). When less than 256 bytes remains of the packet the MCU disables infinite packet length mode and activates fixed packet length mode. When the internal byte counter reaches the PKTLEN value, the transmission or reception ends (the radio enters the state determined by TXOFF_MODE or RXOFF_MODE). Automatic CRC appending/checking can also be used (by setting PKTCTRL0.CRC_EN=1).

When for example a 600-byte packet is to be transmitted, the MCU should do the following (see also Figure 12):

- Set PKTCTRL0.LENGTH_CONFIG=2.

- Pre-program the PKTLEN register to mod(600,256)=88.
- Transmit at least 345 bytes, for example by filling the 64-byte TX FIFO six times (384 bytes transmitted).
- Set PKTCTRL0.LENGTH_CONFIG=0.
- The transmission ends when the packet counter reaches 88. A total of 600 bytes are transmitted.

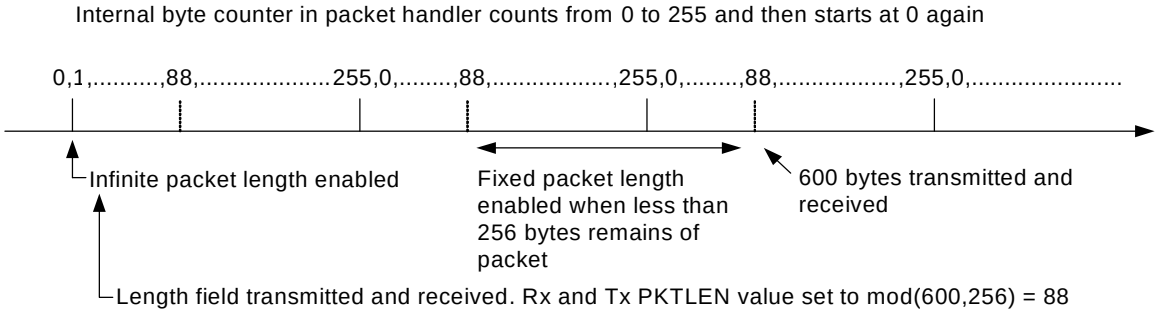

Figure 12: Packet Length > 256

15.3 Packet Filtering in Receive Mode

CC2500 supports three different types of packet-filtering: address filtering, maximum length filtering and CRC filtering.

15.3.1 Address Filtering

Setting PKTCTRL1.ADR_CHK to any other value than zero enables the packet address filter. The packet handler engine will compare the destination address byte in the packet with the programmed node address in the ADDR register and the 0x00 broadcast address when PKTCTRL1.ADR_CHK=10_b or both 0x00 and 0xFF broadcast addresses when PKTCTRL1.ADR_CHK=11_b. If the received address matches a valid address, the packet is received and written into the RX FIFO. If the address match fails, the packet is discarded and receive mode restarted (regardless of the MCSM1.RXOFF_MODE setting).

If the received address matches a valid address when using infinite packet length mode *and* address filtering is enabled, 0xFF will be written into the RX FIFO followed by the address byte and then the payload data.

15.3.2 Maximum Length Filtering

In variable packet length mode, PKTCTRL0.LENGTH_CONFIG=1, the PKTLEN.PACKET_LENGTH register value is used to set the maximum allowed packet length. If the received length byte has a larger value than this, the packet is discarded and receive mode restarted (regardless of the MCSM1.RXOFF_MODE setting).

15.3.3 CRC Filtering

The filtering of a packet when CRC check fails is enabled by setting PKTCTRL1.CRC_AUTOFLUSH=1. The CRC auto flush function will flush the *entire* RX FIFO if the CRC check fails. After auto flushing the RX FIFO, the next state depends on the MCSM1.RXOFF_MODE setting. PKTCTRL0.CC2400_EN must be 0 (default) for the CRC auto flush function to work correctly.

When using the auto flush function, the maximum packet length is 63 bytes in variable packet length mode and 64 bytes in fixed packet length mode. Note that the maximum allowed packet length is reduced by two bytes when PKTCTRL1.APPEND_STATUS is enabled, to make room in the RX FIFO for the two status bytes appended at the end of the packet. Since the entire RX FIFO is flushed when the CRC check fails, the previously received packet must be read out of the FIFO before receiving the current packet. The MCU must not read from the current packet until the CRC has been checked as OK.

15.4 CRC Check

There are two different CRC implementations. PKTCTRL0.CC2400_EN selects between the 2 options. The CRC check is different for the 2

options. Refer also to the CC2500 Errata Notes [1].

15.4.1 PKTCTRL0.CC2400_EN=0

If PKTCTRL0.CC2400_EN=0 it is possible to read back the CRC status in 2 different ways:

1) Set PKTCTRL1.APPEND_STATUS=1 and read the CRC_OK flag in the MSB of the second byte appended to the RX FIFO after the packet data. This requires double buffering of the packet, i.e. the entire packet content of the RX FIFO must be completely read out before it is possible to check whether the CRC indication is OK or not.

2) To avoid reading the entire RX FIFO, another solution is to use the PKTCTRL1.CRC_AUTOFLUSH feature. If this feature is enabled, the entire RX FIFO will be flushed if the CRC check fails. If GDOx_CFG=0x06 the GDOx pin will be asserted when a sync word is found. The GDOx pin will be de-asserted at the end of the packet. When the latter occurs the MCU should read the number of bytes in the RX FIFO from the RXBYTES.NUM_RXBYTES status register. If RXBYTES.NUM_RXBYTES=0 the CRC check failed and the FIFO is flushed. If RXBYTES.NUM_RXBYTES>0 the CRC check was OK and data can be read out of the FIFO.

15.4.2 PKTCTRL0.CC2400_EN=1

If PKTCTRL0.CC2400_EN=1 the CRC can be checked as outlined in 1) in Section 15.4.1 as well as by reading the CRC_OK flag available in the PKTSTATUS[7] register, in the LQI[7] status register or from one of the GDO pins if GDOx_CFG is 0x07 or 0x15.

The PKTCTRL1.CRC_AUTOFLUSH or data whitening cannot be used when PKTCTRL0.CC2400_EN=1.

15.5 Packet Handling in Transmit Mode

The payload that is to be transmitted must be written into the TX FIFO. The first byte written must be the length byte when variable packet length is enabled. The length byte has a value equal to the payload of the packet (including the optional address byte). If address recognition is enabled on the receiver, the second byte written to the TX FIFO must be the address byte. If fixed packet length is enabled, then the first byte written to the TX FIFO should be the address (if the receiver uses address recognition).

The modulator will first send the programmed number of preamble bytes. If data is available in the TX FIFO, the modulator will send the two-byte (optionally 4-byte) sync word and then the payload in the TX FIFO. If CRC is enabled, the checksum is calculated over all the data pulled from the TX FIFO and the result is sent as two extra bytes following the payload data. If the TX FIFO runs empty before the complete packet has been transmitted, the radio will enter TXFIFO_UNDERFLOW state. The only way to exit this state is by issuing an SFTX strobe. Writing to the TX FIFO after it has underflowed will not restart TX mode.

If whitening is enabled, everything following the sync words will be whitened. This is done before the optional FEC/Interleaver stage. Whitening is enabled by setting PKTCTRL0.WHITE_DATA=1.

If FEC/Interleaving is enabled, everything following the sync words will be scrambled by the interleaver and FEC encoded before being modulated. FEC is enabled by setting MDMCFG1.FEC_EN=1.

15.6 Packet Handling in Receive Mode

In receive mode, the demodulator and packet handler will search for a valid preamble and the sync word. When found, the demodulator has obtained both bit and byte synchronism and will receive the first payload byte.

If FEC/Interleaving is enabled, the FEC decoder will start to decode the first payload byte. The interleaver will de-scramble the bits before any other processing is done to the data.

If whitening is enabled, the data will be de-whitened at this stage.

When variable packet length mode is enabled, the first byte is the length byte. The packet handler stores this value as the packet length and receives the number of bytes indicated by the length byte. If fixed packet length mode is used, the packet handler will accept the programmed number of bytes.

Next, the packet handler optionally checks the address and only continues the reception if the address matches. If automatic CRC check is enabled, the packet handler computes CRC and matches it with the appended CRC checksum.

At the end of the payload, the packet handler will optionally write two extra packet status

bytes that contain CRC status, link quality indication and RSSI value.

15.7 Packet Handling in Firmware

When implementing a packet oriented radio protocol in firmware, the MCU needs to know when a packet has been received/transmitted. Additionally, for packets longer than 64 bytes the RX FIFO needs to be read while in RX and the TX FIFO needs to be refilled while in TX. This means that the MCU needs to know the number of bytes that can be read from or written to the RX FIFO and TX FIFO respectively. There are two possible solutions to get the necessary status information:

a) Interrupt driven solution

In both RX and TX one can use one of the GDO pins to give an interrupt when a sync word has been received/transmitted and/or when a complete packet has been received/transmitted (IOCFGx=0x06). In addition, there are two configurations for the IOCFGx register that are associated with the RX FIFO (IOCFGx=0x00 and IOCFGx=0x01) and two that are associated with the TX FIFO (IOCFGx=0x02 and IOCFG=0x03) that can be used as interrupt sources to provide information on how many bytes are in the RX FIFO and TX FIFO respectively. See Table 33.

b) SPI polling

The PKTSTATUS register can be polled at a given rate to get information about the current GDO2 and GDO0 values respectively. The RXBYTES and TXBYTES registers can be polled at a given rate to get information about the number of bytes in the RX FIFO and TX FIFO respectively. Alternatively, the number of bytes in the RX FIFO and TX FIFO can be read from the chip status byte returned on the MISO line each time a header byte, data byte, or command strobe is sent on the SPI bus.

It is recommended to employ an interrupt driven solution as high rate SPI polling will reduce the RX sensitivity. Furthermore, as explained in Section 10.3 and the CC2500 Errata Notes [1], when using SPI polling there is a small, but finite, probability that a single read from registers PKTSTATUS, RXBYTES and TXBYTES is being corrupt. The same is the case when reading the chip status byte.

Refer to the TI website for SW examples ([6] and [7]).

16 Modulation Formats

CC2500 supports amplitude, frequency and phase shift modulation formats. The desired modulation format is set in the MDMCFG2.MOD_FORMAT register.

Optionally, the data stream can be Manchester coded by the modulator and decoded by the demodulator. This option is enabled by setting MDMCFG2.MANCHESTER_EN=1. Manchester encoding is not supported at the same time as using the FEC/Interleaver option.

16.1 Frequency Shift Keying

2-FSK can optionally be shaped by a Gaussian filter with BT=1, producing a GFSK modulated signal.

The frequency deviation is programmed with the DEVIATION_M and DEVIATION_E values in the DEVIATN register. The value has an exponent/mantissa form, and the resultant deviation is given by:

$$f_{dev} = \frac{f_{xosc}}{2^{17}} \cdot (8 + DEVIATION_M) \cdot 2^{DEVIATION_E}$$

The symbol encoding is shown in Table 23.

Format	Symbol	Coding
2-FSK/GFSK	‘0’	– Deviation
	‘1’	+ Deviation

Table 23: Symbol Encoding for 2-FSK/GFSK Modulation

16.2 Minimum Shift Keying

When using MSK[1], the complete transmission (preamble, sync word and payload) will be MSK modulated.

Phase shifts are performed with a constant transition time.

[1] Identical to offset QPSK with half-sine shaping (data coding may differ)

The fraction of a symbol period used to change the phase can be modified with the DEVIATN.DEVIATION_M setting. This is equivalent to changing the shaping of the symbol.

The MSK modulation format implemented in CC2500 inverts the sync word and data compared to e.g. signal generators.

16.3 Amplitude Modulation

The supported amplitude modulation On-Off Keying (OOK) simply turns on or off the PA to modulate 1 and 0 respectively.

17 Received Signal Qualifiers and Link Quality Information

CC2500 has several qualifiers that can be used to increase the likelihood that a valid sync word is detected.

17.1 Sync Word Qualifier

If sync word detection in RX is enabled in register MDMCFG2 the CC2500 will not start filling the RX FIFO and perform the packet filtering described in Section 15.3 before a valid sync word has been detected. The sync word qualifier mode is set by MDMCFG2.SYNC_MODE and is summarized in Table 24. Carrier sense in Table 24 is described in Section 17.4.

MDMCFG2. SYNC_MODE	Sync Word Qualifier Mode
000	No preamble/sync
001	15/16 sync word bits detected
010	16/16 sync word bits detected
011	30/32 sync word bits detected
100	No preamble/sync, carrier sense above threshold
101	15/16 + carrier sense above threshold
110	16/16 + carrier sense above threshold
111	30/32 + carrier sense above threshold

Table 24: Sync Word Qualifier Mode

17.2 Preamble Quality Threshold (PQT)

The Preamble Quality Threshold (PQT) sync-word qualifier adds the requirement that the received sync word must be preceded with a preamble with a quality above a programmed threshold.

Another use of the preamble quality threshold is as a qualifier for the optional RX termination timer. See Section 19.7 on page 43 for details.

The preamble quality estimator increases an internal counter by one each time a bit is received that is different from the previous bit, and decreases the counter by 8 each time a bit is received that is the same as the last bit. The threshold is configured with the register field PKTCTRL1.PQT. A threshold of 4·PQT for this counter is used to gate sync word detection. By setting the value to zero, the preamble quality qualifier of the sync word is disabled.

A “Preamble Quality Reached” signal can be observed on one of the GDO pins by setting IOCFGx.GDOx_CFG=8. It is also possible to determine if preamble quality is reached by checking the PQT_REACHED bit in the PKTSTATUS register. This signal / bit asserts when the received signal exceeds the PQT.

17.3 RSSI

The RSSI value is an estimate of the signal level in the chosen channel. This value is based on the current gain setting in the RX chain and the measured signal level in the channel.

In RX mode, the RSSI value can be read continuously from the RSSI status register until the demodulator detects a sync word (when sync word detection is enabled). At that point the RSSI readout value is frozen until the next time the chip enters the RX state. The RSSI value is in dBm with ½dB resolution. The RSSI update rate, f_{RSSI}, depends on the receiver filter bandwidth ($BW_{channel}$ defined in Section 13) and AGCCTRL0.FILTER_LENGTH.

$$f_{RSSI} = \frac{2 \cdot BW_{channel}}{8 \cdot 2^{FILTER_LENGTH}}$$

If PKTCTRL1.APPEND_STATUS is enabled the RSSI value at sync word detection is

automatically added to the first byte appended after the data payload.

The RSSI value read from the RSSI status register is a 2's complement number. The following procedure can be used to convert the RSSI reading to an absolute power level (RSSI_dBm).

1) Read the RSSI status register
2) Convert the reading from a hexadecimal number to a decimal number (RSSI_dec)
3) If RSSI_dec ≥ 128 then RSSI_dBm = (RSSI_dec - 256)/2 – RSSI_offset
4) Else if RSSI_dec < 128 then RSSI_dBm = (RSSI_dec)/2 – RSSI_offset

Table 25 provides typical values for the RSSI_offset.

Figure 13 shows typical plots of RSSI readings as a function of input power level for different data rates.

Data Rate [kBaud]	RSSI_offset [dB]
2.4	71
10	69
250	72
500	72

Table 25: Typical RSSI_offset Values

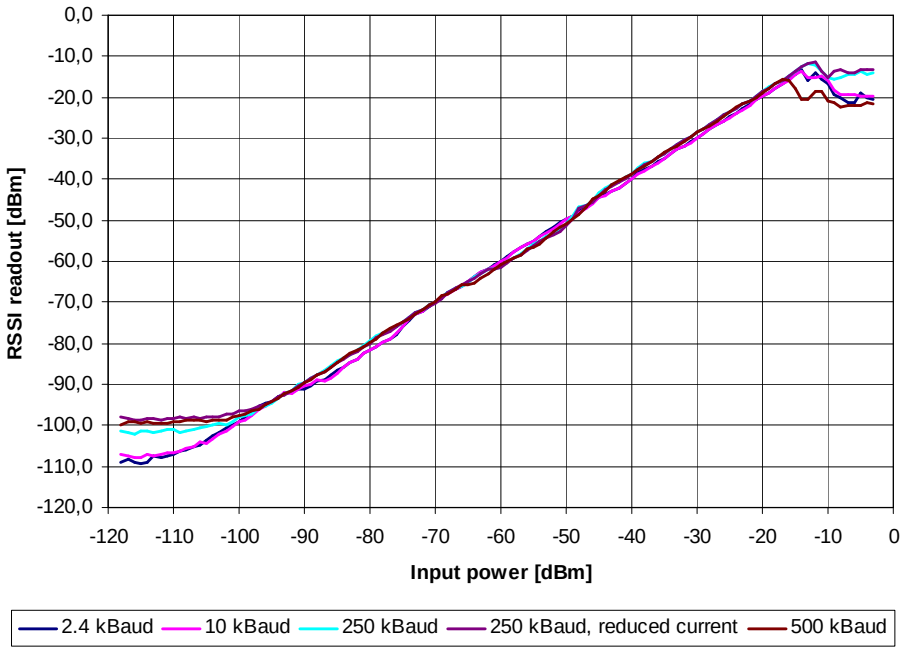

Figure 13: Typical RSSI Value vs. Input Power Level for Some Typical Data Rates

17.4 Carrier Sense (CS)

The Carrier Sense (CS) flag is used as a sync word qualifier and for CCA. The CS flag can be set based on two conditions, which can be individually adjusted:

- CS is asserted when the RSSI is above a programmable absolute threshold, and de-asserted when RSSI is below the same threshold (with hysteresis).
- CS is asserted when the RSSI has increased with a programmable number of dB from one RSSI sample to the next, and de-asserted when RSSI has decreased with the same number of dB. This setting is not dependent on the absolute signal level and is thus useful to detect signals in environments with a time varying noise floor.

Carrier Sense can be used as a sync word qualifier that requires the signal level to be higher than the threshold for a sync word search to be performed. The signal can also be observed on one of the GDO pins by setting

IOCFGx.GDOx_CFG=14 and in the status register bit PKTSTATUS.CS.

Other uses of Carrier Sense include the TX-if-CCA function (see Section 17.5 on page 37) and the optional fast RX termination (see Section 19.7 on page 43).

CS can be used to avoid interference from e.g. WLAN.

17.4.1 CS Absolute Threshold

The absolute threshold related to the RSSI value depends on the following register fields:

- AGCCTRL2.MAX_LNA_GAIN
- AGCCTRL2.MAX_DVGA_GAIN
- AGCCTRL1.CARRIER_SENSE_ABS_THR
- AGCCTRL2.MAGN_TARGET

For a given AGCCTRL2.MAX_LNA_GAIN and AGCCTRL2.MAX_DVGA_GAIN setting the absolute threshold can be adjusted ±7 dB in steps of 1 dB using CARRIER_SENSE_ABS_THR.

The MAGN_TARGET setting is a compromise between blocker tolerance/selectivity and sensitivity. The value sets the desired signal level in the channel into the demodulator. Increasing this value reduces the headroom for blockers, and therefore close-in selectivity. It is strongly recommended to use SmartRF® Studio [5] to generate the correct MAGN_TARGET setting.

Table 26 and Table 27 show the typical RSSI readout values at the CS threshold at 2.4 kBaud and 250 kBaud data rate respectively. The default CARRIER_SENSE_ABS_THR=0 (0 dB) and MAGN_TARGET=3 (33 dB) have been used.

For other data rates the user must generate similar tables to find the CS absolute threshold.

		MAX_DVGA_GAIN[1:0]			
		00	01	10	11
MAX_LNA_GAIN[2:0]	000	-99	-93	-87	-81.5
	001	-97	-90.5	-85	-78.5
	010	-93.5	-87	-82	-76
	011	-91.5	-86	-80	-74
	100	-90.5	-84	-78	-72.5
	101	-88	-82.5	-76	-70
	110	-84.5	-78.5	-73	-67
	111	-82.5	-76	-70	-64

Table 26: Typical RSSI Value in dBm at CS Threshold with Default MAGN_TARGET at 2.4 kBaud

		MAX_DVGA_GAIN[1:0]			
		00	01	10	11
MAX_LNA_GAIN[2:0]	000	-96	-90	-84	-78.5
	001	-94.5	-89	-83	-77.5
	010	-92.5	-87	-81	-75
	011	-91	-85	-78.5	-73
	100	-87.5	-82	-76	-70
	101	-85	-79.5	-73.5	-67.5
	110	-83	-76.5	-70.5	-65
	111	-78	-72	-66	-60

Table 27: Typical RSSI Value in dBm at CS Threshold with Default MAGN_TARGET at 250 kBaud

If the threshold is set high, i.e. only strong signals are wanted, the threshold should be adjusted upwards by first reducing the MAX_LNA_GAIN value and then the MAX_DVGA_GAIN value. This will reduce power consumption in the receiver front end, since the highest gain settings are avoided.

17.4.2 CS Relative Threshold

The relative threshold detects sudden changes in the measured signal level. This setting is not dependent on the absolute signal level and is thus useful to detect signals in environments with a time varying noise floor. The register field AGCCTRL1.CARRIER_SENSE_REL_THR is used to enable/disable relative CS, and to select threshold of 6 dB, 10 dB or 14 dB RSSI change

17.5 Clear Channel Assessment (CCA)

The Clear Channel Assessment CCA) is used to indicate if the current channel is free or busy. The current CCA state is viewable on any of the GDO pins by setting IOCFGx.GDOx_CFG=0x09.

MCSM1.CCA_MODE selects the mode to use when determining CCA.

When the STX or SFSTXON command strobe is given while CC2500 is in the RX state, the TX or FSTXON state is only entered if the clear channel requirements are fulfilled. The chip will otherwise remain in RX (if the channel becomes available, the radio will not enter TX or FSTXON state before a new strobe command is sent on the SPI interface). This feature is called TX-if-CCA. Four CCA requirements can be programmed: Four CCA requirements can be programmed:

- Always (CCA disabled, always goes to TX)
- If RSSI is below threshold
- Unless currently receiving a packet
- Both the above (RSSI below threshold and not currently receiving a packet)

17.6 Link Quality Indicator (LQI)

The Link Quality Indicator is a metric of the current quality of the received signal. If PKTCTRL1.APPEND_STATUS is enabled, the value is automatically added to the last byte appended after the payload. The value can also be read from the LQI status register. The LQI gives an estimate of how easily a received signal can be demodulated by accumulating the magnitude of the error between ideal constellations and the received signal over the 64 symbols immediately following the sync word. LQI is best used as a relative measurement of the link quality (a high value indicates a better link than what a low value does), since the value is dependent on the modulation format.

18 Forward Error Correction with Interleaving

18.1 Forward Error Correction (FEC)

CC2500 has built in support for Forward Error Correction (FEC). To enable this option, set MDMCFG1.FEC_EN to 1. FEC is only supported in fixed packet length mode (PKTCTRL0.LENGTH_CONFIG=0). FEC is employed on the data field and CRC word in order to reduce the gross bit error rate when operating near the sensitivity limit. Redundancy is added to the transmitted data in such a way that the receiver can restore the original data in the presence of some bit errors.

The use of FEC allows correct reception at a lower SNR, thus extending communication range. Alternatively, for a given SNR, using FEC decreases the bit error rate (BER). As the packet error rate (PER) is related to BER by:

$$PER = 1 - (1 - BER)^{packet_length}$$

a lower BER can be used to allow longer packets, or a higher percentage of packets of a given length, to be transmitted successfully. Finally, in realistic ISM radio environments, transient and time-varying phenomena will produce occasional errors even in otherwise good reception conditions. FEC will mask such errors and, combined with interleaving of the coded data, even correct relatively long periods of faulty reception (burst errors).

The FEC scheme adopted for CC2500 is convolutional coding, in which *n* bits are generated based on *k* input bits and the *m* most recent input bits, forming a code stream able to withstand a certain number of bit errors between each coding state (the *m*-bit window).

The convolutional coder is a rate 1/2 code with a constraint length of m=4. The coder codes one input bit and produces two output bits; hence, the effective data rate is halved. I.e. to transmit at the same effective data rate when using FEC, it is necessary to use twice as high over-the-air data rate. This will require a higher receiver bandwidth, and thus reduce sensitivity. In other words, the improved reception by using FEC and the degraded sensitivity from a higher receiver bandwidth will be counteracting factors.

18.2 Interleaving

Data received through radio channels will often experience burst errors due to

interference and time-varying signal strengths. In order to increase the robustness to errors spanning multiple bits, interleaving is used when FEC is enabled. After de-interleaving, a continuous span of errors in the received stream will become single errors spread apart.

CC2500 employs matrix interleaving, which is illustrated in Figure 14. The on-chip interleaving and de-interleaving buffers are 4 x 4 matrices. In the transmitter, the data bits from the rate ½ convolutional coder are written into the rows of the matrix, whereas the bit sequence to be transmitted is read from the columns of the matrix. Conversely, in the receiver, the received symbols are written into the rows of the matrix, whereas the data passed onto the convolutional decoder is read from the columns of the matrix.

When FEC and interleaving is used at least one extra byte is required for trellis termination. In addition, the amount of data transmitted over the air must be a multiple of the size of the interleaver buffer (two bytes). The packet control hardware therefore automatically inserts one or two extra bytes at the end of the packet, so that the total length of the data to be interleaved is an even number. Note that these extra bytes are invisible to the user, as they are removed before the received packet enters the RX FIFO.

When FEC and interleaving is used the minimum data payload is 2 bytes.

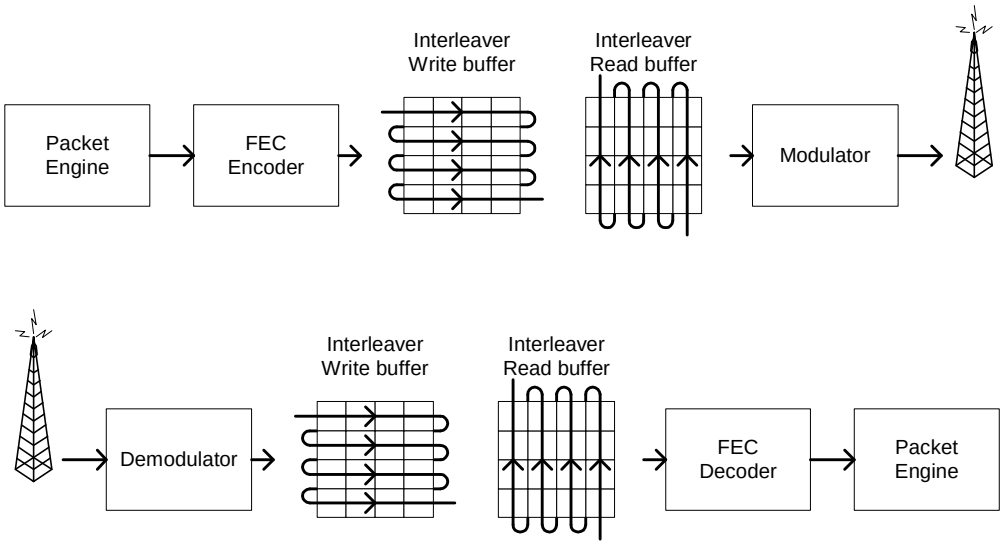

Figure 14: General Principle of Matrix Interleaving

19 Radio Control



Figure 15: Complete Radio Control State Diagram

CC2500 has a built-in state machine that is used to switch between different operation states (modes). The change of state is done either by using command strobes or by internal events such as TX FIFO underflow.

A simplified state diagram, together with typical usage and current consumption, is shown in Figure 5 on page 15. The complete radio control state diagram is shown in Figure 15. The numbers refer to the state number readable in the MARCSTATE status register. This register is primarily for test purposes.

19.1 Power-On Start-Up Sequence

When the power supply is turned on, the system must be reset. One of the following two sequences must be followed: Automatic power-on reset (POR) or manual reset.

19.1.1 Automatic POR

A power-on reset circuit is included in the CC2500. The minimum requirements stated in Section 4.9 must be followed for the power-on reset to function properly. The internal power-up sequence is completed when CHIP_RDYn goes low. CHIP_RDYn is observed on the SO pin after CSn is pulled low. See Section 10.1 for more details on CHIP_RDYn.

When the CC2500 reset is completed the chip will be in the IDLE state and the crystal oscillator will be running. If the chip has had sufficient time for the crystal oscillator to stabilize after the power-on-reset, the SO pin will go low immediately after taking CSn low. If CSn is taken low before reset is completed the SO pin will first go high, indicating that the crystal oscillator is not stabilized, before going low as shown in Figure 16.

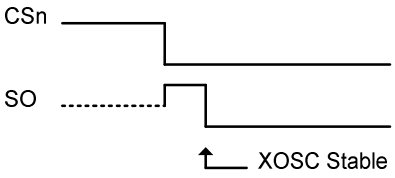

Figure 16: Power-On Reset

19.1.2 Manual Reset

The other global reset possibility on CC2500 is the SRES command strobe. By issuing this strobe, all internal registers and states are set to the default, IDLE state. The manual power-up sequence is as follows (see Figure 17):

- Set SCLK=1 and SI=0, to avoid potential problems with pin control mode (see Section 11.3 on page 26).
- Strobe CSn low / high.
- Hold CSn high for at least 40 µs relative to pulling CSn low
- Pull CSn low and wait for SO to go low (CHIP_RDYn).
- Issue the SRES strobe on the SI line.
- When SO goes low again, reset is complete and the chip is in the IDLE state.

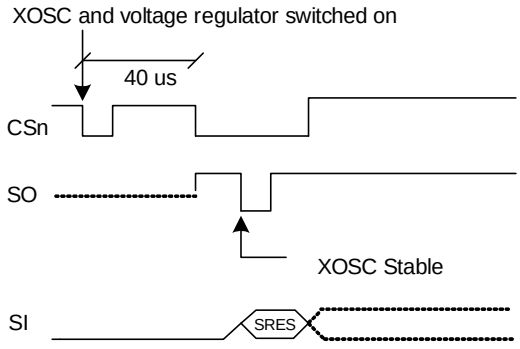

Figure 17: Power-On Reset with SRES

Note that the above reset procedure is only required just after the power supply is first turned on. If the user wants to reset the CC2500 after this, it is only necessary to issue an SRES command strobe.

19.2 Crystal Control

The crystal oscillator (XOSC) is either automatically controlled or always on, if MCSM0.XOSC_FORCE_ON is set.

In the automatic mode, the XOSC will be turned off if the SXOFF or SPWD command strobes are issued; the state machine then goes to XOFF or SLEEP respectively. This can only be done from the IDLE state. The XOSC will be turned off when CSn is released (goes high). The XOSC will be automatically turned on again when CSn goes low. The state machine will then go to the IDLE state. The SO pin on the SPI interface must be pulled low before the SPI interface is ready to be used; as described in Section 10.1 on page 22.

If the XOSC is forced on, the crystal will always stay on even in the SLEEP state.

Crystal oscillator start-up time depends on crystal ESR and load capacitances. The electrical specification for the crystal oscillator can be found in Section 4.4 on page 12.

19.3 Voltage Regulator Control

The voltage regulator to the digital core is controlled by the radio controller. When the chip enters the SLEEP state, which is the state with the lowest current consumption, the voltage regulator is disabled. This occurs after CSn is released when a SPWD command strobe has been sent on the SPI interface. The chip is now in the SLEEP state. Setting CSn low again will turn on the regulator and crystal

oscillator and make the chip enter the IDLE state.

When wake on radio is enabled, the WOR module will control the voltage regulator as described in Section 19.5.

19.4 Active Modes

CC2500 has two active modes: receive and transmit. These modes are activated directly by the MCU by using the SRX and STX command strobes, or automatically by Wake on Radio.

The frequency synthesizer must be calibrated regularly. CC2500 has one manual calibration option (using the SCAL strobe), and three automatic calibration options, controlled by the MCSM0.FS_AUTOCAL setting:

- Calibrate when going from IDLE to either RX or TX (or FSTXON)
- Calibrate when going from either RX or TX to IDLE automatically
- Calibrate every fourth time when going from either RX or TX to IDLE automatically

If the radio goes from TX or RX to IDLE by issuing an SIDLE strobe, calibration will not be performed. The calibration takes a constant number of XOSC cycles (see Table 28 for timing details).

When RX is activated, the chip will remain in receive mode until a packet is successfully received or the RX termination timer expires (see Section 19.7). Note: the probability that a false sync word is detected can be reduced by using PQT, CS, maximum sync word length and sync word qualifier mode as describe in Section 17. After a packet is successfully received the radio controller will then go to the state indicated by the MCSM1.RXOFF_MODE setting. The possible destinations are:

- IDLE
- FSTXON: Frequency synthesizer on and ready at the TX frequency. Activate TX with STX.
- TX: Start sending preambles
- RX: Start search for a new packet

Similarly, when TX is active the chip will remain in the TX state until the current packet has been successfully transmitted. Then the state will change as indicated by the MCSM1.TXOFF_MODE setting. The possible destinations are the same as for RX.

The MCU can manually change the state from RX to TX and vice versa by using the command strobes. If the radio controller is currently in transmit and the SRX strobe is used, the current transmission will be ended and the transition to RX will be done.

If the radio controller is in RX when the STX or SFSTXON command strobes are used, the TX-if-CCA function will be used. If the channel is not clear, the chip will remain in RX. The MCSM1.CCA_MODE setting controls the conditions for clear channel assessment. See Section 17.5 on page 37 for details.

The SIDLE command strobe can always be used to force the radio controller to go to the IDLE state.

19.5 Wake On Radio (WOR)

The optional Wake on Radio (WOR) functionality enables CC2500 to periodically wake up from SLEEP and listen for incoming packets without MCU interaction.

When the SWOR strobe command is sent on the SPI interface, the CC2500 will go to the SLEEP state when CSn is released. The RC oscillator must be enabled before the WOR strobe can be used, as it is the clock source for the WOR timer. The on-chip timer will set CC2500 into the IDLE state and then the RX state. After a programmable time in RX, the chip goes back to the SLEEP state, unless a packet is received. See Figure 18 and Section 19.7 for details on how the timeout works.

Set the CC2500 into the IDLE state to exit WOR mode.

CC2500 can be set up to signal the MCU that a packet has been received by using the GDO pins. If a packet is received, the MCSM1.RXOFF_MODE will determine the behaviour at the end of the received packet. When the MCU has read the packet, it can put the chip back into SLEEP with the SWOR strobe from the IDLE state. The FIFO will lose its contents in the SLEEP state.

The WOR timer has two events, Event 0 and Event 1. In the SLEEP state with WOR activated, reaching Event 0 will turn on the digital regulator and start the crystal oscillator.

Event 1 follows Event 0 after a programmed timeout.

The time between two consecutive Event 0 is programmed with a mantissa value given by WOREVT1.EVENT0 and WOREVT0.EVENT0, and an exponent value set by WORCTRL.WOR_RES. The equation is:

$$t_{Event0} = \frac{750}{f_{XOSC}} \cdot EVENT0 \cdot 2^{5 \cdot WOR_RES}$$

The Event 1 timeout is programmed with WORCTRL.EVENT1. Figure 18 shows the timing relationship between Event 0 timeout and Event 1 timeout.

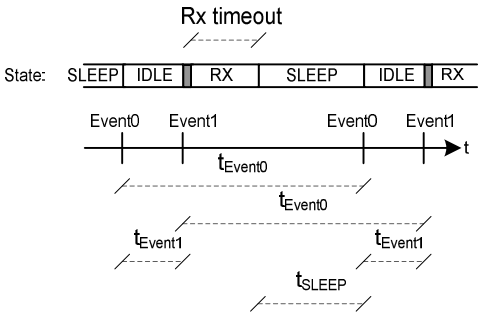

Figure 18: Event 0 and Event 1 Relationship

The time from the CC2500 enters SLEEP state until the next Event 0 is programmed to appear (t_{SLEEP} in Figure 18) should be larger than 11.08 ms when using a 26 MHz crystal and 10.67 ms when a 27 MHz crystal is used. If t_{SLEEP} is less than 11.08 (10.67) ms there is a chance that the consecutive Event 0 will occur

$$\frac{750}{f_{XOSC}} \cdot 128 \text{ seconds}$$

too early. Application Note AN047 [3] explains in detail the theory of operation and the different registers involved when using WOR, as well as highlighting important aspects when using WOR mode.

19.5.1 RC Oscillator and Timing

The frequency of the low-power RC oscillator used for the WOR functionality varies with temperature and supply voltage. In order to keep the frequency as accurate as possible, the RC oscillator will be calibrated whenever possible, which is when the XOSC is running and the chip is not in the SLEEP state. When the power and XOSC is enabled, the clock used by the WOR timer is a divided XOSC clock. When the chip goes to the SLEEP state, the RC oscillator will use the last valid calibration result. The frequency of the RC oscillator is locked to the main crystal frequency divided by 750.

In applications where the radio wakes up very often, typically several times every second, it is possible to do the RC oscillator calibration once and then turn off calibration (WORCTRL.RC_CAL=0) to reduce the current consumption. This requires that RC oscillator calibration values are read from registers RCCTRL0_STATUS and RCCTRL1_STATUS and written back to RCCTRL0 and RCCTRL0 respectively. If the RC oscillator calibration is turned off it will have to be manually turned on again if temperature and supply voltage changes.

Refer to Application Note AN047 [3] for further details.

19.6 Timing

The radio controller controls most timing in CC2500, such as synthesizer calibration, PLL lock time and RX/TX turnaround times. Timing from IDLE to RX and IDLE to TX is constant, dependent on the auto calibration setting. RX/TX and TX/RX turnaround times are constant. The calibration time is constant 18739 clock periods. Table 28 shows timing in crystal clock cycles for key state transitions.

Power on time and XOSC start-up times are variable, but within the limits stated in Table 7.

Note that in a frequency hopping spread spectrum or a multi-channel protocol the calibration time can be reduced from 721 µs to approximately 150 µs. This is explained in Section 31.2.

Description	XOSC Periods	26 MHz Crystal
IDLE to RX, no calibration	2298	88.4 µs
IDLE to RX, with calibration	~21037	809 µs
IDLE to TX/FSTXON, no calibration	2298	88.4 µs
IDLE to TX/FSTXON, with calibration	~21037	809 µs
TX to RX switch	560	21.5 µs
RX to TX switch	250	9.6 µs
RX or TX to IDLE, no calibration	2	0.1 µs
RX or TX to IDLE, with calibration	~18739	721 µs
Manual calibration	~18739	721 µs

Table 28: State Transition Timing

19.7 RX Termination Timer

CC2500 has optional functions for automatic termination of RX after a programmable time. The main use for this functionality is wake-on-radio (WOR), but it may be useful for other applications. The termination timer starts when in RX state. The timeout is programmable with the MCSM2.RX_TIME setting. When the timer expires, the radio controller will check the condition for staying in RX; if the condition is not met, RX will terminate.

The programmable conditions are:

- MCSM2.RX_TIME_QUAL=0: Continue receive if sync word has been found
- MCSM2.RX_TIME_QUAL=1: Continue receive if sync word has been found or preamble quality is above threshold (PQT)

If the system can expect the transmission to have started when enabling the receiver, the MCSM2.RX_TIME_RSSI function can be used. The radio controller will then terminate RX if the first valid carrier sense sample indicates no carrier (RSSI below threshold). See Section 17.4 on page 35 for details on Carrier Sense.

For OOK modulation, lack of carrier sense is only considered valid after eight symbol periods. Thus, the MCSM2.RX_TIME_RSSI function can be used in OOK mode when the distance between “1” symbols is 8 or less.

If RX terminates due to no carrier sense when the MCSM2.RX_TIME_RSSI function is used, or if no sync word was found when using the MCSM2.RX_TIME timeout function, the chip will always go back to IDLE if WOR is disabled and back to SLEEP if WOR is enabled. Otherwise, the MCSM1.RXOFF_MODE setting determines the state to go to when RX ends. This means that the chip will not automatically go back to SLEEP once a sync word has been received. It is therefore recommended to always wake up the microcontroller on sync word detection when using WOR mode. This can be done by selecting output signal 6 (see Table 33 on page 53) on one of the programmable GDO output pins, and programming the microcontroller to wake up on an edge-triggered interrupt from this GDO pin.

20 Data FIFO

The CC2500 contains two 64 byte FIFOs, one for received data and one for data to be transmitted. The SPI interface is used to read from the RX FIFO and write to the TX FIFO. Section 10.5 contains details on the SPI FIFO access. The FIFO controller will detect overflow in the RX FIFO and underflow in the TX FIFO.

When writing to the TX FIFO it is the responsibility of the MCU to avoid TX FIFO overflow. A TX FIFO overflow will result in an error in the TX FIFO content.

Likewise, when reading the RX FIFO the MCU must avoid reading the RX FIFO past its empty value, since an RX FIFO underflow will result in an error in the data read out of the RX FIFO.

The chip status byte that is available on the S0 pin while transferring the SPI header contains the fill grade of the RX FIFO if the access is a read operation and the fill grade of the TX FIFO if the access is a write operation. Section 10.1 on page 22 contains more details on this.

The number of bytes in the RX FIFO and TX FIFO can also be read from the status registers RXBYTES.NUM_RXBYTES and TXBYTES.NUM_TXBYTES respectively. If a received data byte is written to the RX FIFO at the exact same time as the last byte in the RX FIFO is read over the SPI interface, the RX FIFO pointer is not properly updated and the last read byte is duplicated. To avoid this problem one should never empty the RX FIFO before the last byte of the packet is received.

For packet lengths less than 64 bytes it is recommended to wait until the complete packet has been received before reading it out of the RX FIFO.

If the packet length is larger than 64 bytes the MCU must determine how many bytes can be read from the RX FIFO (RXBYTES.NUM_RXBYTES-1) and the following software routine can be used:

1. Read RXBYTES.NUM_RXBYTES repeatedly at a rate guaranteed to be at least twice that of which RF bytes are received until the same value is returned twice; store value in *n*.
2. If *n* < # of bytes remaining in packet, read *n*-1 bytes from the RX FIFO.
3. Repeat steps 1 and 2 until *n* = # of bytes remaining in the packet.
4. Read the remaining bytes from the RX FIFO.

The 4-bit FIFOTHR.FIFO_THR setting is used to program threshold points in the FIFOs. Table 29 lists the 16 FIFO_THR settings and the corresponding thresholds for the RX and TX FIFOs. The threshold value is coded in opposite directions for the RX FIFO and TX FIFO. This gives equal margin to the overflow and underflow conditions when the threshold is reached.

A signal will assert when the number of bytes in the FIFO is equal to or higher than the programmed threshold. The signal can be viewed on the GDO pins (see Section 28 on page 51).

Figure 20 shows the number of bytes in both the RX FIFO and TX FIFO when the threshold flag toggles, in the case of FIFO_THR=13. Figure 19 shows the signal as the respective FIFO is filled above the threshold, and then drained below.

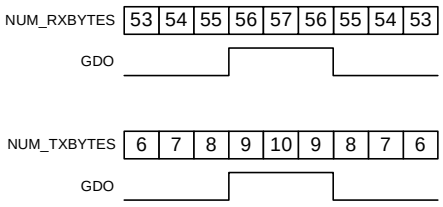

Figure 19: FIFO_THR=13 vs. Number of Bytes in FIFO (GDOx_CFG=0x00 in RX and GDOx_CFG=0x02 in TX)

FIFO_THR	Bytes in TX FIFO	Bytes in RX FIFO
0 (0000)	61	4
1 (0001)	57	8
2 (0010)	53	12
3 (0011)	49	16
4 (0100)	45	20
5 (0101)	41	24
6 (0110)	37	28
7 (0111)	33	32
8 (1000)	29	36
9 (1001)	25	40
10 (1010)	21	44
11 (1011)	17	48
12 (1100)	13	52
13 (1101)	9	56
14 (1110)	5	60
15 (1111)	1	64

Table 29: FIFO_THR Settings and the Corresponding FIFO Thresholds

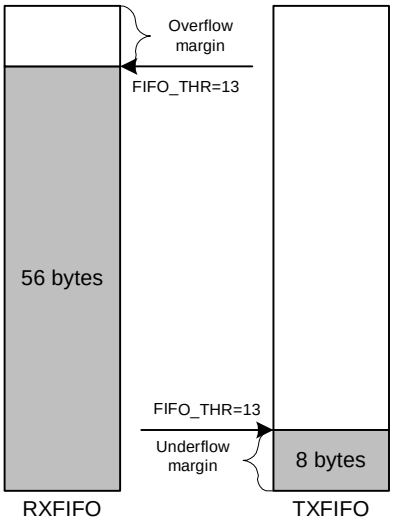

Figure 20: Example of FIFOs at Threshold

21 Frequency Programming

The frequency programming in ***CC2500*** is designed to minimize the programming needed in a channel-oriented system.

To set up a system with channel numbers, the desired channel spacing is programmed with the MDMCFG0.CHANSPC_M and MDMCFG1.CHANSPC_E registers. The channel spacing registers are mantissa and exponent respectively.

The base or start frequency is set by the 24 bit frequency word located in the FREQ2, FREQ1 and FREQ0 registers. This word will typically

be set to the centre of the lowest channel frequency that is to be used.

The desired channel number is programmed with the 8-bit channel number register, CHANNR.CHAN, which is multiplied by the channel offset. The resultant carrier frequency is given by:

$$f_{carrier} = \frac{f_{XOSC}}{2^{16}} \cdot \left(FREQ + CHAN \cdot \left((256 + CHANSPC_M) \cdot 2^{CHANSPC_E-2} \right) \right)$$

With a 26 MHz crystal the maximum channel spacing is 405 kHz. To get e.g. 1 MHz channel spacing one solution is to use 333 kHz channel spacing and select each third channel in CHANNR.CHAN.

The preferred IF frequency is programmed with the FSCTRL1.FREQ_IF register. The IF frequency is given by:

$$f_{IF} = \frac{f_{XOSC}}{2^{10}} \cdot FREQ_IF$$

Note that the SmartRF® Studio software [5] automatically calculates the optimum FSCTRL1.FREQ_IF register setting based on channel spacing and channel filter bandwidth.

If any frequency programming register is altered when the frequency synthesizer is running, the synthesizer may give an undesired response. Hence, the frequency programming should only be updated when the radio is in the IDLE state.

22 VCO

The VCO is completely integrated on-chip.

22.1 VCO and PLL Self-Calibration

The VCO characteristics will vary with temperature and supply voltage changes, as well as the desired operating frequency. In order to ensure reliable operation, **CC2500** includes frequency synthesizer self-calibration circuitry. This calibration should be done regularly, and must be performed after turning on power and before using a new frequency (or channel). The number of XOSC cycles for completing the PLL calibration is given in Table 28 on page 42.

The calibration can be initiated automatically or manually. The synthesizer can be automatically calibrated each time the synthesizer is turned on, or each time the synthesizer is turned off automatically. This is configured with the MCSM0.FS_AUTOCAL register setting. In manual mode, the calibration is initiated when the SCAL command strobe is activated in the IDLE mode.

Note that the calibration values are maintained in SLEEP mode, so the calibration is still valid after waking up from SLEEP mode (unless supply voltage or temperature has changed significantly).

To check that the PLL is in lock the user can program register IOCFGx.GDOx_CFG to 0x0A and use the lock detector output available on the GDOx pin as an interrupt for the MCU (x = 0,1 or 2). A positive transition on the GDOx pin means that the PLL is in lock. As an alternative the user can read register FSCAL1. The PLL is in lock if the register content is different from 0x3F. Refer also to the **CC2500** Errata Notes [1]. For more robust operation the source code could include a check so that the PLL is re-calibrated until PLL lock is achieved if the PLL does not lock the first time.

23 Voltage Regulators

CC2500 contains several on-chip linear voltage regulators, which generate the supply voltage needed by low-voltage modules. These voltage regulators are invisible to the user, and can be viewed as integral parts of the various modules. The user must however make sure that the absolute maximum ratings and required pin voltages in Table 1 and Table 13 are not exceeded. The voltage regulator for the digital core requires one external decoupling capacitor.

Setting the CSn pin low turns on the voltage regulator to the digital core and starts the crystal oscillator. The SO pin on the SPI interface must go low before the first positive edge of SCLK (setup time is given in Table 16).

If the chip is programmed to enter power-down mode, (SPWD strobe issued), the power will be turned off after CSn goes high. The power and crystal oscillator will be turned on again when CSn goes low.

The voltage regulator output should only be used for driving the CC2500.

24 Output Power Programming

The RF output power level from the device has two levels of programmability, as illustrated in Figure 21.

The RF output power level from the device is programmed through the PATABLE register.

- If 2-FSK, GFSK or MSK modulation is used the desired output power is programmed to index 0 in the PATABLE register (PATABLE(0)[7:0]). The 3-bit FREND0.PA_POWER value shall be set to 0 (reset default value).
- If OOK modulation is used the desired output power for the logic 0 and logic 1 power levels are programmed to index 0 and index 1 in the PATABLE register respectively (PATABLE(0)[7:0] and PATABLE(1)[7:0]). The 3-bit FREND0.PA_POWER value shall be set to 1.

Table 31 contains recommended PATABLE settings for various output levels and frequency bands. See Section 10.6 on page 24 for PATABLE programming details. The SmartRF® Studio software [5] should be used to obtain optimum PATABLE settings for various output powers.

PATABLE must be programmed in burst mode if writing to other entries than PATABLE(0) (OOK modulation). Note that all content of the PATABLE, except for the first byte (index 0) is lost when entering the SLEEP state.

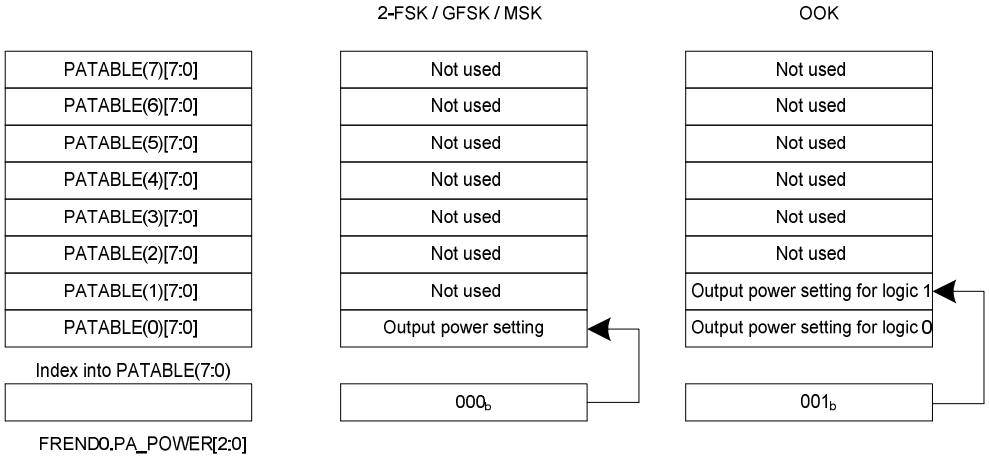

Figure 21: PA_POWER and PATABLE

Default power setting	Output power, typical [dBm]	Current consumption, typical [mA]
0xC6	-12	11.1

Table 30: Output Power and Current Consumption for Default PATABLE Setting

Output Power, Typical, +25°C, 3.0 V [dBm]	PATABLE Value	Current Consumption, Typical [mA]
(–55 or less)	0x00	8.4
–30	0x50	9.9
–28	0x44	9.7
–26	0xC0	10.2
–24	0x84	10.1
–22	0x81	10.0
–20	0x46	10.1
–18	0x93	11.7
–16	0x55	10.8
–14	0x8D	12.2
–12	0xC6	11.1
–10	0x97	12.2
–8	0x6E	14.1
–6	0x7F	15.0
–4	0xA9	16.2
–2	0xBB	17.7
0	0xFE	21.2
+1	0xFF	21.5

Table 31: Optimum PATABLE Settings for Various Output Power Levels

25 Selectivity

Figure 22 to Figure 26 show the typical selectivity performance (adjacent and alternate rejection).

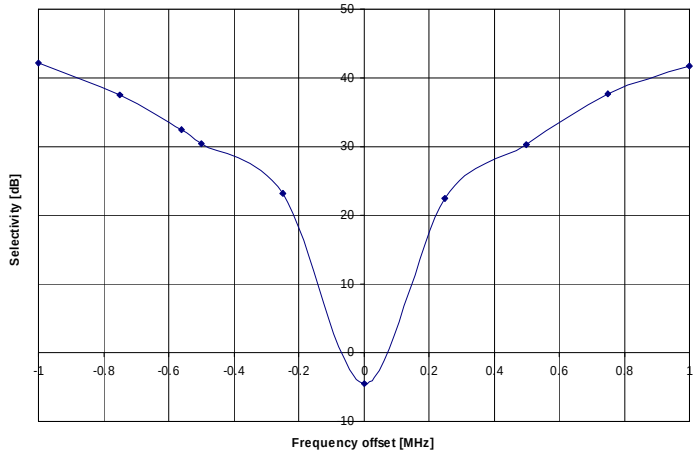

Figure 22: Typical Selectivity at 2.4 kBaud. IF Frequency is 273.9 kHz. `MDMCFG2.DEM_DCFILT_OFF=1`

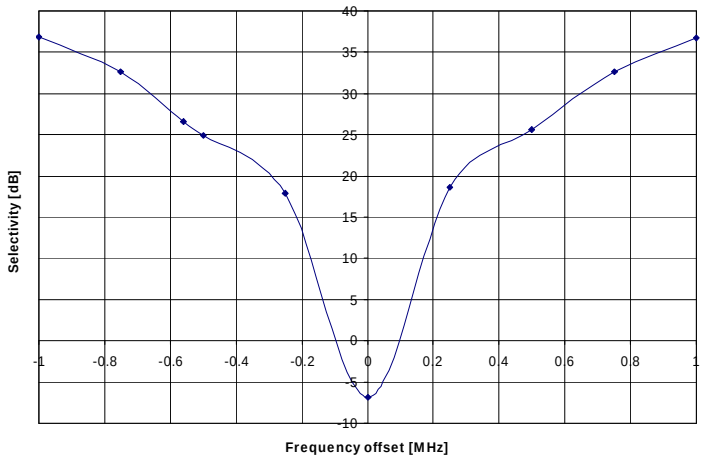

Figure 23: Typical Selectivity at 10 kBaud. IF Frequency is 273.9 kHz. `MDMCFG2.DEM_DCFILT_OFF=1`

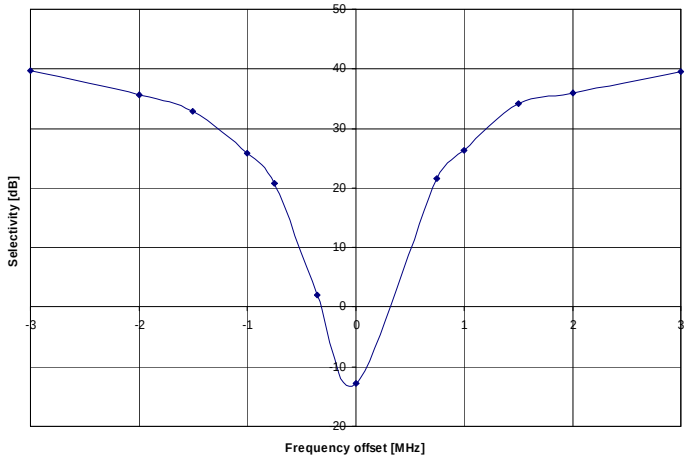

Figure 24: Typical Selectivity at 250 kBaud. IF Frequency is 177.7 kHz. `MDMCFG2.DEM_DCFILT_OFF=0`

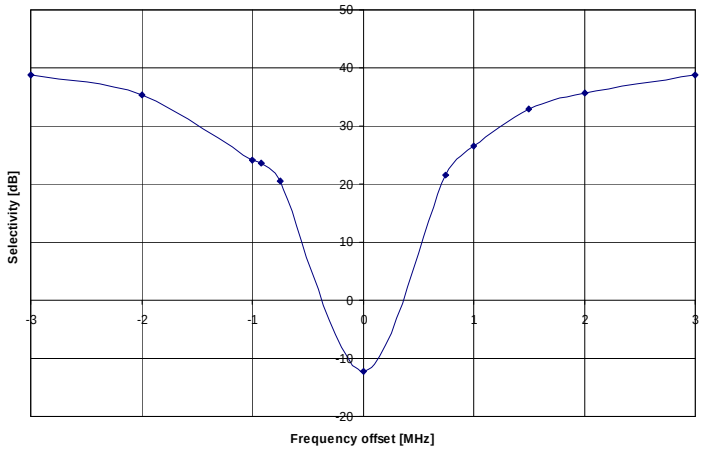

Figure 25: Typical Selectivity at 250 kBaud. IF Frequency is 457 kHz. `MDMCFG2.DEM_DCFILT_OFF=1`

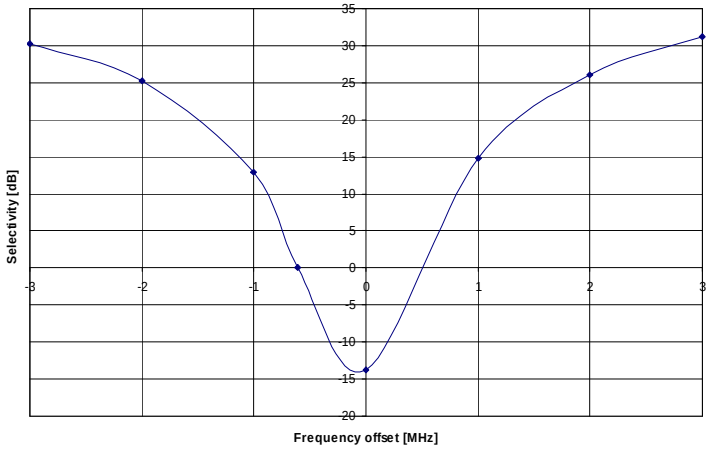

Figure 26: Typical Selectivity at 500 kBaud. IF Frequency is 304.7 kHz. `MDMCFG2.DEM_DCFILT_OFF=0`

26 Crystal Oscillator

A crystal in the frequency range 26-27 MHz must be connected between the XOSC_Q1 and XOSC_Q2 pins. The oscillator is designed for parallel mode operation of the crystal. In addition, loading capacitors (C81 and C101) for the crystal are required. The loading capacitor values depend on the total load capacitance, C_L, specified for the crystal. The total load capacitance seen between the crystal terminals should equal C_L for the crystal to oscillate at the specified frequency.

$$C_L = \frac{1}{\frac{1}{C_{81}} + \frac{1}{C_{101}}} + C_{parasitic}$$

The parasitic capacitance is constituted by pin input capacitance and PCB stray capacitance. Total parasitic capacitance is typically 2.5 pF.

The crystal oscillator circuit is shown in Figure 27. Typical component values for different values of C_L are given in Table 32.

The crystal oscillator is amplitude regulated. This means that a high current is used to start up the oscillations. When the amplitude builds up, the current is reduced to what is necessary to maintain approximately 0.4 Vpp signal swing. This ensures a fast start-up, and keeps the drive level to a minimum. The ESR of the crystal should be within the specification in order to ensure a reliable start-up (see Section 4.4 on page 12).

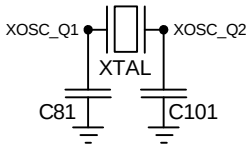

Figure 27: Crystal Oscillator Circuit

Component	C_L= 10 pF	C_L=13 Pf	C_L=16 pF
C81	15 pF	22 pF	27 pF
C101	15 pF	22 pF	27 pF

Table 32: Crystal Oscillator Component Values

26.1 Reference Signal

The chip can alternatively be operated with a reference signal from 26 to 27 MHz instead of a crystal. This input clock can either be a full-swing digital signal (0 V to VDD) or a sine wave of maximum 1 V peak-peak amplitude. The reference signal must be connected to the XOSC_Q1 input. The sine wave must be connected to XOSC_Q1 using a serial capacitor. When using a full-swing digital signal this capacitor can be omitted. The XOSC_Q2 line must be left un-connected. C81 and C101 can be omitted when using a reference signal.

27 External RF Match

The balanced RF input and output of **CC2500** share two common pins and are designed for a simple, low-cost matching and balun network on the printed circuit board. The receive- and transmit switching at the **CC2500** front-end is controlled by a dedicated on-chip function, eliminating the need for an external RX/TX-switch.

A few passive external components combined with the internal RX/TX switch/termination circuitry ensures match in both RX and TX mode.

Although **CC2500** has a balanced RF input/output, the chip can be connected to a single-ended antenna with few external low cost capacitors and inductors.

The passive matching/filtering network connected to **CC2500** should have the following differential impedance as seen from the RF-port (RF_P and RF_N) towards the antenna:

$$Z_{out} = 80 + j74\ \Omega$$

To ensure optimal matching of the CC2500 differential output it is highly recommended to follow the CC2500EM reference designs [4] as closely as possible. Gerber files for the reference designs are available for download from the TI website.

28 PCB Layout Recommendations

The top layer should be used for signal routing, and the open areas should be filled with metallization connected to ground using several vias.

The area under the chip is used for grounding and shall be connected to the bottom ground plane with several vias for good thermal performance and sufficiently low inductance to ground. In the CC2500EM reference designs [4] 5 vias are placed inside the exposed die attached pad. These vias should be "tented" (covered with solder mask) on the component side of the PCB to avoid migration of solder through the vias during the solder reflow process.

The solder paste coverage should not be 100%. If it is, out gassing may occur during the reflow process, which may cause defects (splattering, solder balling). Using "tented" vias reduces the solder paste coverage below 100%.

See Figure 28 for top solder resist and top paste masks. See Figure 30 for recommended PCB layout for QLP 20 package.

Each decoupling capacitor should be placed as close as possible to the supply pin it is supposed to decouple. Each decoupling capacitor should be connected to the power line by separate vias. The best routing is from the power line to the decoupling capacitor and then to the CC2500 supply pin. Supply power filtering is very important.

Each decoupling capacitor ground pad should be connected to the ground plane using a separate via. Direct connections between neighboring power pins will increase noise coupling and should be avoided unless absolutely necessary.

The external components should ideally be as small as possible (0402 is recommended) and surface mount devices are highly recommended. Please note that components smaller than those specified may have differing characteristics.

Precaution should be used when placing the microcontroller in order to avoid noise interfering with the RF circuitry.

A CC2500/2550DK Development Kit with a fully assembled CC2500EM Evaluation Module is available. It is strongly advised that this reference layout is followed very closely in order to get the best performance. The schematic, BOM and layout Gerber files are all available from the TI website [4].

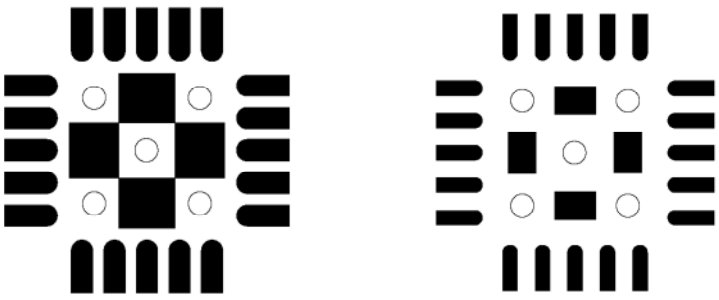

Figure 28: Left: Top Solder Resist Mask (negative). Right: Top Paste Mask. Circles are Vias.

29 General Purpose / Test Output Control Pins

The three digital output pins GDO0, GDO1 and GDO2 are general control pins configured with IOCFG0.GDO0_CFG, IOCFG1.GDO1_CFG and IOCFG2.GDO2_CFG respectively. Table 33 shows the different signals that can be monitored on the GDO pins. These signals can be used as inputs to the MCU. GDO1 is the same pin as the SO pin on the SPI interface, thus the output programmed on this pin will only be valid when CSn is high. The default value for GDO1 is 3-stated, which is useful when the SPI interface is shared with other devices.

The default value for GDO0 is a 135-141 kHz clock output (XOSC frequency divided by 192). Since the XOSC is turned on at power-on-reset, this can be used to clock the MCU in systems with only one crystal. When the MCU is up and running, it can change the clock frequency by writing to IOCFG0.GDO0_CFG.

An on-chip analog temperature sensor is enabled by writing the value 128 (0x80) to the IOCFG0.GDO0_CFG register. The voltage on the GDO0 pin is then proportional to temperature. See Section 4.7 on page 14 for temperature sensor specifications.

If the IOCFGx.GDO0_CFG setting is less than 0x20 and IOCFGx_GDOx_INV is 0 (1), the GDO0 and GDO2 pins will be hardwired to 0 (1) and the GDO1 pin will be hardwired to 1 (0) in the SLEEP state. These signals will be hardwired until the CHIP_RDYn signal goes low.

If the IOCFGx.GDO0_CFG setting is 0x20 or higher the GDO pins will work as programmed also in SLEEP state. As an example, GDO1 is high impedance in all states if IOCFG1.GDO0_CFG=0x2E.

GDOx_CFG[5:0]	Description	
0 (0x00)	Associated to the RX FIFO: Asserts when RX FIFO is filled at or above the RX FIFO threshold. De-asserts when RX FIFO is drained below the same threshold.	
1 (0x01)	Associated to the RX FIFO: Asserts when RX FIFO is filled at or above the RX FIFO threshold or the end of packet is reached. De-asserts when the RX FIFO is empty.	
2 (0x02)	Associated to the TX FIFO: Asserts when the TX FIFO is filled at or above the TX FIFO threshold. De-asserts when the TX FIFO is below the same threshold.	
3 (0x03)	Associated to the TX FIFO: Asserts when TX FIFO is full. De-asserts when the TX FIFO is drained below theTX FIFO threshold.	
4 (0x04)	Asserts when the RX FIFO has overflowed. De-asserts when the FIFO has been flushed.	
5 (0x05)	Asserts when the TX FIFO has underflowed. De-asserts when the FIFO is flushed.	
6 (0x06)	Asserts when sync word has been sent / received, and de-asserts at the end of the packet. In RX, the pin will de-assert when the optional address check fails or the RX FIFO overflows. In TX the pin will de-assert if the TX FIFO underflows.	
7 (0x07)	Asserts when a packet has been received with CRC OK. De-asserts when the first byte is read from the RX FIFO. Only valid if PKTCTRL0.CC2400_EN=1.	
8 (0x08)	Preamble Quality Reached. Asserts when the PQI is above the programmed PQT value.	
9 (0x09)	Clear channel assessment. High when RSSI level is below threshold (dependent on the current CCA_MODE setting)	
10 (0x0A)	Lock detector output. The PLL is in lock if the lock detector output has a positive transition or is constantly logic high. To check for PLL lock the lock detector output should be used as an interrupt for the MCU.	
11 (0x0B)	Serial Clock. Synchronous to the data in synchronous serial mode. In RX mode, data is set up on the falling edge by CC2500 when GDOx_INV=0. In TX mode, data is sampled by CC2500 on the rising edge of the serial clock when GDOx_INV=0.	
12 (0x0C)	Serial Synchronous Data Output (DO). Used for synchronous serial mode.	
13 (0x0D)	Serial Data Output. Used for asynchronous serial mode.	
14 (0x0E)	Carrier sense. High if RSSI level is above threshold.	
15 (0x0F)	CRC_OK. The last CRC comparison matched. Cleared when entering/restarting RX mode. Only valid if PKTCTRL0.CC2400_EN=1.	
16 (0x10) to 21 (0x15)	Reserved – used for test.	
22 (0x16)	RX_HARD_DATA[1]. Can be used together with RX_SYMBOL_TICK for alternative serial RX output.	
23 (0x17)	RX_HARD_DATA[0]. Can be used together with RX_SYMBOL_TICK for alternative serial RX output.	
24 (0x18)	Reserved – used for test.	
25 (0x19)	Reserved – used for test.	
26 (0x1A)	Reserved – used for test.	
27 (0x1B)	PA_PD. Note: PA_PD will have the same signal level in SLEEP and TX states. To control an external PA or RX/TX switch in applications where the SLEEP state is used it is recommended to use GDOx_CFGx=0x2F instead.	
28 (0x1C)	LNA_PD. Note: LNA_PD will have the same signal level in SLEEP and RX states. To control an external LNA or RX/TX switch in applications where the SLEEP state is used it is recommended to use GDOx_CFGx=0x2F instead.	
29 (0x1D)	RX_SYMBOL_TICK. Can be used together with RX_HARD_DATA for alternative serial RX output.	
30 (0x1E) to 35 (0x23)	Reserved – used for test.	
36 (0x24)	WOR_EVNT0	
37 (0x25)	WOR_EVNT1	
38 (0x26)	Reserved – used for test.	
39 (0x27)	CLK_32k	
40 (0x28)	Reserved – used for test.	
41 (0x29)	CHIP_RDYn	
42 (0x2A)	Reserved – used for test.	
43 (0x2B)	XOSC_STABLE	
44 (0x2C)	Reserved – used for test.	
45 (0x2D)	GDO0_Z_EN_N. When this output is 0, GDO0 is configured as input (for serial TX data).	
46 (0x2E)	High impedance (3-state)	
47 (0x2F)	HW to 0 (HW1 achieved by setting GDOx_INV=1). Can be used to control an external LNA/PA or RX/TX switch.	
48 (0x30)	CLK_XOSC/1	Note: There are 3 GDO pins, but only one CLK_XOSC/n can be selected as an output at any time. If CLK_XOSC/n is to be monitored on one of the GDO pins, the other two GDO pins must be configured to values less than 0x30. The GDO0 default value is CLK_XOSC/192.
49 (0x31)	CLK_XOSC/1.5	
50 (0x32)	CLK_XOSC/2	
51 (0x33)	CLK_XOSC/3	
52 (0x34)	CLK_XOSC/4	
53 (0x35)	CLK_XOSC/6	
54 (0x36)	CLK_XOSC/8	
55 (0x37)	CLK_XOSC/12	
56 (0x38)	CLK_XOSC/16	
57 (0x39)	CLK_XOSC/24	
58 (0x3A)	CLK_XOSC/32	
59 (0x3B)	CLK_XOSC/48	
60 (0x3C)	CLK_XOSC/64	
61 (0x3D)	CLK_XOSC/96	
62 (0x3E)	CLK_XOSC/128	
63 (0x3F)	CLK_XOSC/192	

Table 33: GDOx Signal Selection (x = 0, 1 or 2)

30 Asynchronous and Synchronous Serial Operation

Several features and modes of operation have been included in the CC2500 to provide backward compatibility with previous Chipcon products and other existing RF communication systems. For new systems, it is recommended to use the built-in packet handling features, as they can give more robust communication, significantly offload the microcontroller and simplify software development.

30.1 Asynchronous Operation

For backward compatibility with systems already using the asynchronous data transfer from other Chipcon products, asynchronous transfer is also included in CC2500. When asynchronous transfer is enabled, several of the support mechanisms for the MCU that are included in CC2500 will be disabled, such as packet handling hardware, buffering in the FIFO and so on. The asynchronous transfer mode does not allow the use of the data whitener, interleaver, and FEC, and it is not possible to use Manchester encoding.

Note that MSK is not supported for asynchronous transfer.

Setting PKTCTRL0.PKT_FORMAT to 3 enables asynchronous serial mode.

In TX, the GDO0 pin is used for data input (TX data). Data output can be on GDO0, GDO1 or GDO2. This is set by the IOCFG0.GDO0_CFG, IOCFG1.GDO1_CFG and IOCFG2.GDO2_CFG fields.

The CC2500 modulator samples the level of the asynchronous input 8 times faster than the programmed data rate. The timing requirement for the asynchronous stream is that the error in the bit period must be less than one eighth of the programmed data rate.

30.2 Synchronous Serial Operation

Setting PKTCTRL0.PKT_FORMAT to 1 enables synchronous serial mode. In the synchronous serial mode, data is transferred on a two wire serial interface. The CC2500 provides a clock that is used to set up new data on the data input line or sample data on the data output line. Data input (TX data) is the GDO0 pin. This pin will automatically be configured as an input when TX is active. The data output pin can be any of the GDO pins; this is set by the IOCFG0.GDO0_CFG, IOCFG1.GDO1_CFG and IOCFG2.GDO2_CFG fields.

Preamble and sync word insertion/detection may or may not be active, dependent on the sync mode set by the MDMCFG2.SYNC_MODE. If preamble and sync word is disabled, all other packet handler features and FEC should also be disabled. The MCU must then handle preamble and sync word insertion and detection in software. If preamble and sync word insertion/detection is left on, all packet handling features and FEC can be used. One exception is that the address filtering feature is unavailable in synchronous serial mode.

When using the packet handling features in synchronous serial mode, the CC2500 will insert and detect the preamble and sync word and the MCU will only provide/get the data payload. This is equivalent to the recommended FIFO operation mode.

31 System Considerations and Guidelines

31.1 SRD Regulations

International regulations and national laws regulate the use of radio receivers and transmitters. The most important regulations for the 2.4 GHz band are EN 300 440 and EN 300 328 (Europe), FCC CFR47 part 15.247 and 15.249 (USA), and ARIB STD-T66 (Japan). A summary of the most important aspects of these regulations can be found in Application Note AN032 [2].

Please note that compliance with regulations is dependent on complete system performance. It is the customer's responsibility to ensure that the system complies with regulations.

31.2 Frequency Hopping and Multi-Channel Systems

The 2.400 – 2.4835 GHz band is shared by many systems both in industrial, office and home environments. It is therefore recommended to use frequency hopping spread spectrum (FHSS) or a multi-channel protocol because the frequency diversity makes the system more robust with respect to interference from other systems operating in the same frequency band. FHSS also combats multipath fading.

CC2500 is highly suited for FHSS or multi-channel systems due to its agile frequency synthesizer and effective communication interface. Using the packet handling support and data buffering is also beneficial in such systems as these features will significantly offload the host controller.

Charge pump current, VCO current and VCO capacitance array calibration data is required for each frequency when implementing frequency hopping for **CC2500**. There are 3 ways of obtaining the calibration data from the chip:

1) Frequency hopping with calibration for each hop. The PLL calibration time is approximately 720 µs. The blanking interval between each frequency hop is then approximately 810 us.

2) Fast frequency hopping without calibration for each hop can be done by calibrating each frequency at startup and saving the resulting FSCAL3, FSCAL2 and FSCAL1 register values in MCU memory. Between each frequency hop, the calibration process can then be replaced by writing the FSCAL3, FSCAL2 and FSCAL1 register values corresponding to the next RF frequency. The PLL turn on time is approximately 90 µs. The blanking interval between each frequency hop is then approximately 90 us. The VCO current calibration result is available in FSCAL2 and is not dependent on the RF frequency. Neither is the charge pump current calibration result available in FSCAL3. The same value can therefore be used for all frequencies.

3) Run calibration on a single frequency at startup. Next write 0 to FSCAL3[5:4] to disable the charge pump calibration. After writing to FSCAL3[5:4] strobe SRX (or STX) with MCSM0.FS_AUTOCAL=1 for each new frequency hop. That is, VCO current and VCO capacitance calibration is done but not charge pump current calibration. When charge pump current calibration is disabled the calibration time is reduced from approximately 720 µs to approximately 150 µs. The blanking interval between each frequency hop is then approximately 240 us

There is a trade off between blanking time and memory space needed for storing calibration data in non-volatile memory. Solution 2) above gives the shortest blanking interval, but requires more memory space to store calibration values. Solution 3) gives approximately 570 µs smaller blanking interval than solution 1).

31.3 Wideband Modulation not Using Spread Spectrum

Digital modulation systems under FCC part 15.247 includes 2-FSK and GFSK modulation. A maximum peak output power of 1 W (+30 dBm) is allowed if the 6 dB bandwidth of the modulated signal exceeds 500 kHz. In addition, the peak power spectral density conducted to the antenna shall not be greater than +8 dBm in any 3 kHz band.

Operating at high data rates and high frequency separation, the **CC2500** is suited for systems targeting compliance with digital modulation systems as defined by FCC part 15.247. An external power amplifier is needed to increase the output above +1 dBm.

31.4 Data Burst Transmissions

The high maximum data rate of **CC2500** opens up for burst transmissions. A low average data rate link (e.g. 10 kBaud), can be realized using a higher over-the-air data rate. Buffering the data and transmitting in bursts at high data rate (e.g. 500 kBaud) will reduce the time in active mode, and hence also reduce the average current consumption significantly. Reducing the time in active mode will reduce the likelihood of collisions with other systems, e.g. WLAN.

31.5 Continuous Transmissions

In data streaming applications the **CC2500** opens up for continuous transmissions at 500 kBaud effective data rate. As the modulation is done with a closed loop PLL, there is no limitation in the length of a transmission. (Open loop modulation used in some transceivers often prevents this kind of continuous data streaming and reduces the effective data rate.)

31.6 Crystal Drift Compensation

The CC2500 has a very fine frequency resolution (see Table 9). This feature can be used to compensate for frequency offset and drift.

The frequency offset between an 'external' transmitter and the receiver is measured in the CC2500 and can be read back from the FREQEST status register as described in Section 14.1. The measured frequency offset can be used to calibrate the frequency using the 'external' transmitter as the reference. That is, the received signal of the device will match the receiver's channel filter better. In the same way the centre frequency of the transmitted signal will match the 'external' transmitter's signal.

31.7 Spectrum Efficient Modulation

CC2500 also has the possibility to use Gaussian shaped 2-FSK (GFSK). This spectrum-shaping feature improves adjacent channel power (ACP) and occupied bandwidth. In 'true' 2-FSK systems with abrupt frequency shifting, the spectrum is inherently broad. By making the frequency shift 'softer', the spectrum can be made significantly narrower. Thus, higher data rates can be transmitted in the same bandwidth using GFSK.

31.8 Low Cost Systems

A differential antenna will eliminate the need for a balun, and the DC biasing can be achieved in the antenna topology, see Figure 3. The CC25XX Folded Dipole reference design [8] contains schematics and layout files for a CC2500EM with a folded dipole PCB antenna. Please see DN004 [9] for more details on this design.

A HC-49 type SMD crystal is used in the CC2500EM reference design [4]. Note that the crystal package strongly influences the price. In a size constrained PCB design a smaller, but more expensive, crystal may be used.

31.9 Battery Operated Systems

In low power applications, the SLEEP state with the crystal oscillator core switched off should be used when the CC2500 is not active. It is possible to leave the crystal oscillator core running in the SLEEP state if start-up time is critical.

The WOR functionality should be used in low power applications.

31.10 Increasing Output Power

In some applications it may be necessary to extend the link range. Adding an external power amplifier is the most effective way of doing this.

The power amplifier should be inserted between the antenna and the balun, and two T/R switches are needed to disconnect the PA in RX mode. See Figure 29.

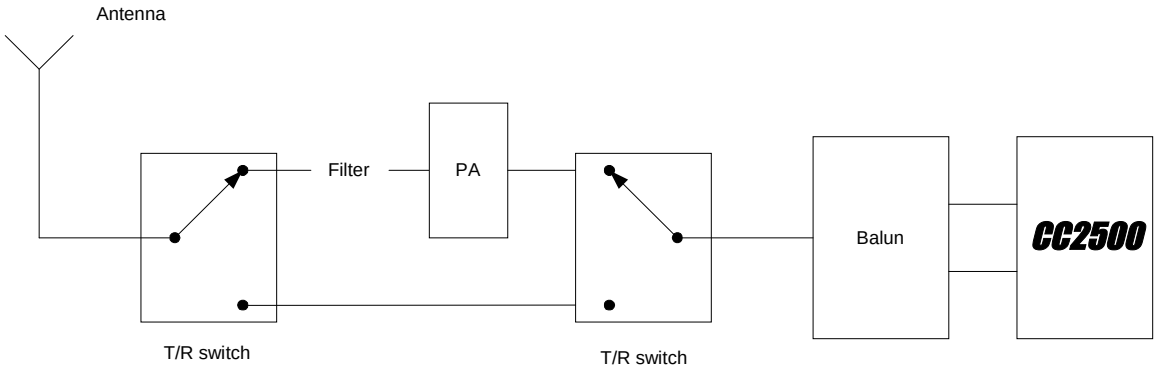

Figure 29. Block Diagram of CC2500 Usage with External Power Amplifier

32 Configuration Registers

The configuration of *CC2500* is done by programming 8-bit registers. The optimum configuration data based on selected system parameters are most easily found by using the SmartRF® Studio software [5]. Complete descriptions of the registers are given in the following tables. After chip reset, all the registers have default values as shown in the tables. The optimum register setting might differ from the default value. After a reset all registers that shall be different from the default value therefore needs to be programmed through the SPI interface.

There are 13 command strobe registers, listed in Table 34. Accessing these registers will initiate the change of an internal state or mode. There are 47 normal 8-bit configuration registers, listed in Table 35. Many of these registers are for test purposes only, and need not be written for normal operation of *CC2500*.

There are also 12 status registers, which are listed in Table 36. These registers, which are read-only, contain information about the status of *CC2500*.

The two FIFOs are accessed through one 8-bit register. Write operations write to the TX FIFO, while read operations read from the RX FIFO.

During the header byte transfer and while writing data to a register or the TX FIFO, a status byte is returned on the SO line. This status byte is described in Table 17 on page 23.

Table 37 summarizes the SPI address space. The address to use is given by adding the base address to the left and the burst and R/W bits on the top. Note that the burst bit has different meaning for base addresses above and below 0x2F.

Address	Strobe Name	Description
0x30	SRES	Reset chip.
0x31	SFSTXON	Enable and calibrate frequency synthesizer (if MCSM0.FS_AUTOCAL=1). If in RX (with CCA): Go to a wait state where only the synthesizer is running (for quick RX / TX turnaround).
0x32	SXOFF	Turn off crystal oscillator.
0x33	SCAL	Calibrate frequency synthesizer and turn it off. SCAL can be strobed from IDLE mode without setting manual calibration mode (MCSM0.FS_AUTOCAL=0)
0x34	SRX	Enable RX. Perform calibration first if coming from IDLE and MCSM0.FS_AUTOCAL=1.
0x35	STX	In IDLE state: Enable TX. Perform calibration first if MCSM0.FS_AUTOCAL=1. If in RX state and CCA is enabled: Only go to TX if channel is clear.
0x36	SIDLE	Exit RX / TX, turn off frequency synthesizer and exit Wake-On-Radio mode if applicable.
0x38	SWOR	Start automatic RX polling sequence (Wake-on-Radio) as described in Section 19.5 if WORCTRL.RC_PD=0.
0x39	SPWD	Enter power down mode when CSn goes high.
0x3A	SFRX	Flush the RX FIFO buffer. Only issue SFRX in IDLE or RXFIFO_OVERFLOW states.
0x3B	SFTX	Flush the TX FIFO buffer. Only issue SFTX in IDLE or TXFIFO_UNDERFLOW states.
0x3C	SWORRST	Reset real time clock to Event1 value.
0x3D	SNOP	No operation. May be used to get access to the chip status byte.

Table 34: Command Strobes

Address	Register	Description	Preserved in SLEEP State	Details on Page Number
0x00	IOCFG2	GDO2 output pin configuration	Yes	61
0x01	IOCFG1	GDO1 output pin configuration	Yes	61
0x02	IOCFG0	GDO0 output pin configuration	Yes	61
0x03	FIFOTHR	RX FIFO and TX FIFO thresholds	Yes	62
0x04	SYNC1	Sync word, high byte	Yes	62
0x05	SYNC0	Sync word, low byte	Yes	62
0x06	PKTLEN	Packet length	Yes	62
0x07	PKTCTRL1	Packet automation control	Yes	63
0x08	PKTCTRL0	Packet automation control	Yes	64
0x09	ADDR	Device address	Yes	64
0x0A	CHANNR	Channel number	Yes	64
0x0B	FSCTRL1	Frequency synthesizer control	Yes	65
0x0C	FSCTRL0	Frequency synthesizer control	Yes	65
0x0D	FREQ2	Frequency control word, high byte	Yes	65
0x0E	FREQ1	Frequency control word, middle byte	Yes	65
0x0F	FREQ0	Frequency control word, low byte	Yes	65
0x10	MDMCFG4	Modem configuration	Yes	66
0x11	MDMCFG3	Modem configuration	Yes	66
0x12	MDMCFG2	Modem configuration	Yes	67
0x13	MDMCFG1	Modem configuration	Yes	68
0x14	MDMCFG0	Modem configuration	Yes	68
0x15	DEVIATN	Modem deviation setting	Yes	69
0x16	MCSM2	Main Radio Control State Machine configuration	Yes	70
0x17	MCSM1	Main Radio Control State Machine configuration	Yes	71
0x18	MCSM0	Main Radio Control State Machine configuration	Yes	72
0x19	FOCCFG	Frequency Offset Compensation configuration	Yes	73
0x1A	BSCFG	Bit Synchronization configuration	Yes	74
0x1B	AGCTRL2	AGC control	Yes	75
0x1C	AGCTRL1	AGC control	Yes	76
0x1D	AGCTRL0	AGC control	Yes	77
0x1E	WOREVT1	High byte Event 0 timeout	Yes	77
0x1F	WOREVT0	Low byte Event 0 timeout	Yes	78
0x20	WORCTRL	Wake On Radio control	Yes	78
0x21	FREND1	Front end RX configuration	Yes	78
0x22	FREND0	Front end TX configuration	Yes	79
0x23	FSCAL3	Frequency synthesizer calibration	Yes	79
0x24	FSCAL2	Frequency synthesizer calibration	Yes	79
0x25	FSCAL1	Frequency synthesizer calibration	Yes	80
0x26	FSCAL0	Frequency synthesizer calibration	Yes	80
0x27	RCCTRL1	RC oscillator configuration	Yes	80
0x28	RCCTRL0	RC oscillator configuration	Yes	80
0x29	FSTEST	Frequency synthesizer calibration control	No	80
0x2A	PTEST	Production test	No	80
0x2B	AGCTEST	AGC test	No	81
0x2C	TEST2	Various test settings	No	81
0x2D	TEST1	Various test settings	No	81
0x2E	TEST0	Various test settings	No	81

Table 35: Configuration Registers Overview

Address	Register	Description	Details on Page Number
0x30 (0xF0)	PARTNUM	CC2500 part number	81
0x31 (0xF1)	VERSION	Current version number	81
0x32 (0xF2)	FREQEST	Frequency offset estimate	81
0x33 (0xF3)	LQI	Demodulator estimate for Link Quality	82
0x34 (0xF4)	RSSI	Received signal strength indication	82
0x35 (0xF5)	MARCSTATE	Control state machine state	82
0x36 (0xF6)	WORTIME1	High byte of WOR timer	83
0x37 (0xF7)	WORTIME0	Low byte of WOR timer	83
0x38 (0xF8)	PKTSTATUS	Current GDOx status and packet status	83
0x39 (0xF9)	VCO_VC_DAC	Current setting from PLL calibration module	83
0x3A (0xFA)	TXBYTES	Underflow and number of bytes in the TX FIFO	83
0x3B (0xFB)	RXBYTES	Overflow and number of bytes in the RX FIFO	84
0x3C (0xFC)	RCCTRL1_STATUS	Last RC oscillator calibration result	84
0x3D (0xFD)	RCCTRL0_STATUS	Last RC oscillator calibration result	84

Table 36: Status Registers Overview

	Write		Read		
	Single byte	Burst	Single byte	Burst	
	+0x00	+0x40	+0x80	+0xC0	
0x00	IOCFG2				R/W configuration registers, burst access possible
0x01	IOCFG1				
0x02	IOCFG0				
0x03	FIFOTHR				
0x04	SYNC1				
0x05	SYNC0				
0x06	PKTLEN				
0x07	PKTCTRL1				
0x08	PKTCTRL0				
0x09	ADDR				
0x0A	CHANNR				
0x0B	FSCTRL1				
0x0C	FSCTRL0				
0x0D	FREQ2				
0x0E	FREQ1				
0x0F	FREQ0				
0x10	MDMCFG4				
0x11	MDMCFG3				
0x12	MDMCFG2				
0x13	MDMCFG1				
0x14	MDMCFG0				
0x15	DEVIATN				
0x16	MCSM2				
0x17	MCSM1				
0x18	MCSM0				
0x19	FOCCFG				
0x1A	BSCFG				
0x1B	AGCCTRL2				
0x1C	AGCCTRL1				
0x1D	AGCCTRL0				
0x1E	WOREVT1				
0x1F	WOREVT0				
0x20	WORCTRL				
0x21	FREND1				
0x22	FREND0				
0x23	FSCAL3				
0x24	FSCAL2				
0x25	FSCAL1				
0x26	FSCAL0				
0x27	RCCTRL1				
0x28	RCCTRL0				
0x29	FSTEST				
0x2A	PTEST				
0x2B	AGCTEST				
0x2C	TEST2				
0x2D	TEST1				
0x2E	TEST0				
0x2F					
0x30	SRES		SRES	PARTNUM	Command strobes, status registers (read only) and multi byte registers
0x31	SFSTXON		SFSTXON	VERSION	
0x32	SXOFF		SXOFF	FREQEST	
0x33	SCAL		SCAL	LQI	
0x34	SRX		SRX	RSSI	
0x35	STX		STX	MARCSTATE	
0x36	SIDLE		SIDLE	WORTIME1	
0x37				WORTIME0	
0x38	SWOR		SWOR	PKTSTATUS	
0x39	SPWD		SPWD	VCO_VC_DAC	
0x3A	SFRX		SFRX	TXBYTES	
0x3B	SFTX		SFTX	RXBYTES	
0x3C	SWORRST		SWORRST	RCCTRL1_STATUS	
0x3D	SNOP		SNOP	RCCTRL0_STATUS	
0x3E	PATABLE	PATABLE	PATABLE	PATABLE	
0x3F	TX FIFO	TX FIFO	RX FIFO	RX FIFO	

Table 37: SPI Address Space

32.1 Configuration Register Details – Registers with Preserved Values in SLEEP State

0x00: IOCFG2 – GDO2 Output Pin Configuration

Bit	Field Name	Reset	R/W	Description
7	Reserved		R0	
6	GDO2_INV	0	R/W	Invert output, i.e. select active low (1) / high (0)
5:0	GDO2_CFG[5:0]	41 (0x29)	R/W	Default is CHIP_RDYn (see Table 33 on page 53).

0x01: IOCFG1 – GDO1 Output Pin Configuration

Bit	Field Name	Reset	R/W	Description
7	GDO_DS	0	R/W	Set high (1) or low (0) output drive strength on the GDO pins.
6	GDO1_INV	0	R/W	Invert output, i.e. select active low (1) / high (0)
5:0	GDO1_CFG[5:0]	46 (0x2E)	R/W	Default is 3-state (see Table 33 on page 53)

0x02: IOCFG0 – GDO0 Output Pin Configuration

Bit	Field Name	Reset	R/W	Description
7	TEMP_SENSOR_ENABLE	0	R/W	Enable analog temperature sensor. Write 0 in all other register bits when using temperature sensor.
6	GDO0_INV	0	R/W	Invert output, i.e. select active low (1) / high (0)
5:0	GDO0_CFG[5:0]	63 (0x3F)	R/W	Default is CLK_XOSC/192 (see Table 33 on page 53).

0x03: FIFOTHR – RX FIFO and TX FIFO Thresholds

Bit	Field Name	Reset	R/W	Description
7:4	Reserved	0	R0	Write 0 for compatibility with possible future extensions
3:0	FIFO_THR[3:0]	7 (0111)	R/W	Set the threshold for the TX FIFO and RX FIFO. The threshold is exceeded when the number of bytes in the FIFO is equal to or higher than the threshold value.

Setting	Bytes in TX FIFO	Bytes in RX FIFO
0 (0000)	61	4
1 (0001)	57	8
2 (0010)	53	12
3 (0011)	49	16
4 (0100)	45	20
5 (0101)	41	24
6 (0110)	37	28
7 (0111)	33	32
8 (1000)	29	36
9 (1001)	25	40
10 (1010)	21	44
11 (1011)	17	48
12 (1100)	13	52
13 (1101)	9	56
14 (1110)	5	60
15 (1111)	1	64

0x04: SYNC1 – Sync Word, High Byte

Bit	Field Name	Reset	R/W	Description
7:0	SYNC[15:8]	211 (0xD3)	R/W	8 MSB of 16-bit sync word

0x05: SYNC0 – Sync Word, Low Byte

Bit	Field Name	Reset	R/W	Description
7:0	SYNC[7:0]	145 (0x91)	R/W	8 LSB of 16-bit sync word

0x06: PKTLEN – Packet Length

Bit	Field Name	Reset	R/W	Description
7:0	PACKET_LENGTH	255 (0xFF)	R/W	Indicates the packet length when fixed packet length is enabled. If variable length packets are used, this value indicates the maximum length packets allowed.

0x07: PKTCTRL1 – Packet Automation Control

Bit	Field Name	Reset	R/W	Description
7:5	PQT[2:0]	0 (000)	R/W	Preamble quality estimator threshold. The preamble quality estimator increases an internal counter by one each time a bit is received that is different from the previous bit, and decreases the counter by 8 each time a bit is received that is the same as the last bit. A threshold of 4·PQT for this counter is used to gate sync word detection. When PQT=0 a sync word is always accepted.
4	Reserved	0	R0	
3	CRC_AUTOFLUSH	0	R/W	Enable automatic flush of RX FIFO when CRC is not OK. This requires that only one packet is in the RX FIFO and that packet length is limited to the RX FIFO size. PKTCTRL0.CC2400_EN must be 0 (default) for the CRC autoflush function to work correctly.
2	APPEND_STATUS	1	R/W	When enabled, two status bytes will be appended to the payload of the packet. The status bytes contain RSSI and LQI values, as well as the CRC OK flag.
1:0	ADR_CHK[1:0]	0 (00)	R/W	Controls address check configuration of received packages. Setting: 0 (00) – No address check 1 (01) – Address check, no broadcast 2 (10) – Address check and 0 (0x00) broadcast 3 (11) – Address check and 0 (0x00) and 255 (0xFF) broadcast

0x08: PKTCTRL0 – Packet Automation Control

Bit	Field Name	Reset	R/W	Description
7	Reserved		R0	
6	WHITE_DATA	1	R/W	Turn data whitening on / off 0: Whitening off 1: Whitening on Data whitening can only be used when PKTCTRL0.CC2400_EN=0 (default).
5:4	PKT_FORMAT[1:0]	0 (00)	R/W	Format of RX and TX data 0 (00): Normal mode, use FIFOs for RX and TX 1 (01): Synchronous serial mode, used for backwards compatibility. Data in on GDO0 2 (10): Random TX mode; sends random data using PN9 generator. Used for test. Works as normal mode, setting 0 (00), in RX. 3 (11): Asynchronous serial mode. Data in on GDO0 and data out on either of the GDO0 pins
3	CC2400_EN	0	R/W	Enable CC2400 support. Use same CRC implementation as CC2400. PKTCTRL1.CRC_AUTOFLUSH must be 0 if PKTCTRL0.CC2400_EN=1. PKTCTRL0.WHITE_DATA must be 0 if PKTCTRL0.CC2400_EN=1.
2	CRC_EN	1	R/W	1: CRC calculation in TX and CRC check in RX enabled 0: CRC disabled for TX and RX
1:0	LENGTH_CONFIG[1:0]	1 (01)	R/W	Configure the packet length 0 (00): Fixed packet length mode. Length configured in PKTLEN register 1 (01): Variable packet length mode. Packet length configured by the first byte after sync word 2 (10): Infinite packet length mode 3 (11): Reserved

0x09: ADDR – Device Address

Bit	Field Name	Reset	R/W	Description
7:0	DEVICE_ADDR[7:0]	0 (0x00)	R/W	Address used for packet filtration. Optional broadcast addresses are 0 (0x00) and 255 (0xFF).

0x0A: CHANNR – Channel Number

Bit	Field Name	Reset	R/W	Description
7:0	CHAN[7:0]	0 (0x00)	R/W	The 8-bit unsigned channel number, which is multiplied by the channel spacing setting and added to the base frequency.

0x0B: FSCTRL1 – Frequency Synthesizer Control

Bit	Field Name	Reset	R/W	Description
7:5	Reserved		R0	
4:0	FREQ_IF[4:0]	15 (0x0F)	R/W	The desired IF frequency to employ in RX. Subtracted from FS base frequency in RX and controls the digital complex mixer in the demodulator. $f_{IF} = \frac{f_{XOSC}}{2^{10}} \cdot FREQ_IF$ The default value gives an IF frequency of 381 kHz, assuming a 26.0 MHz crystal.

0x0C: FSCTRL0 – Frequency Synthesizer Control

Bit	Field Name	Reset	R/W	Description
7:0	FREQOFF[7:0]	0 (0x00)	R/W	Frequency offset added to the base frequency before being used by the FS. (2's complement). Resolution is $F_{XTAL}/2^{14}$ (1.59 - 1.65 kHz); range is ±202 kHz to ±210 kHz, dependent of XTAL frequency.

0x0D: FREQ2 – Frequency Control Word, High Byte

Bit	Field Name	Reset	R/W	Description
7:6	FREQ[23:22]	1 (01)	R	FREQ[23:22] is always binary 01 (the FREQ2 register is in the range 85 to 95 with 26-27 MHz crystal)
5:0	FREQ[21:16]	30 (0x1E)	R/W	FREQ[23:0] is the base frequency for the frequency synthesiser in increments of $F_{XOSC}/2^{16}$. $f_{carrier} = \frac{f_{XOSC}}{2^{16}} \cdot FREQ[23:0]$

0x0E: FREQ1 – Frequency Control Word, Middle Byte

Bit	Field Name	Reset	R/W	Description
7:0	FREQ[15:8]	196 (0xC4)	R/W	Ref. FREQ2 register

0x0F: FREQ0 – Frequency Control Word, Low Byte

Bit	Field Name	Reset	R/W	Description
7:0	FREQ[7:0]	236 (0xEC)	R/W	Ref. FREQ2 register

0x10: MDMCFG4 – Modem Configuration

Bit	Field Name	Reset	R/W	Description
7:6	CHANBW_E[1:0]	2 (10)	R/W	
5:4	CHANBW_M[1:0]	0 (00)	R/W	Sets the decimation ratio for the delta-sigma ADC input stream and thus the channel bandwidth. $BW_{channel} = \frac{f_{XOSC}}{8 \cdot (4 + CHANBW_M) \cdot 2^{CHANBW_E}}$ The default values give 203 kHz channel filter bandwidth, assuming a 26.0 MHz crystal.
3:0	DRATE_E[3:0]	12 (1100)	R/W	The exponent of the user specified symbol rate

0x11: MDMCFG3 – Modem Configuration

Bit	Field Name	Reset	R/W	Description
7:0	DRATE_M[7:0]	34 (0x22)	R/W	The mantissa of the user specified symbol rate. The symbol rate is configured using an unsigned, floating-point number with 9-bit mantissa and 4-bit exponent. The 9th bit is a hidden '1'. The resulting data rate is: $R_{DATA} = \frac{(256 + DRATE_M) \cdot 2^{DRATE_E}}{2^{28}} \cdot f_{XOSC}$ The default values give a data rate of 115.051 kBaud (closest setting to 115.2 kBaud), assuming a 26.0 MHz crystal.

0x12: MDMCFG2 – Modem Configuration

<table>
<tr><th>Bit</th><th>Field Name</th><th>Reset</th><th>R/W</th><th>Description</th></tr>
<tr><td>7</td><td>DEM_DCFILT_OFF</td><td>0</td><td>R/W</td><td>Disable digital DC blocking filter before demodulator.
0 = Enable (better sensitivity)
1 = Disable (current optimized). Only for data rates ≤ 250 kBaud
The recommended IF frequency changes when the DC blocking is disabled. Please use SmartRF® Studio [5] to calculate correct register setting.</td></tr>
<tr><td>6:4</td><td>MOD_FORMAT[2:0]</td><td>0 (000)</td><td>R/W</td><td>The modulation format of the radio signal
<table>
<tr><th>Setting</th><th>Modulation format</th></tr>
<tr><td>0 (000)</td><td>2-FSK</td></tr>
<tr><td>1 (001)</td><td>GFSK</td></tr>
<tr><td>2 (010)</td><td>-</td></tr>
<tr><td>3 (011)</td><td>OOK</td></tr>
<tr><td>4 (100)</td><td>-</td></tr>
<tr><td>5 (101)</td><td>-</td></tr>
<tr><td>6 (110)</td><td>-</td></tr>
<tr><td>7 (111)</td><td>MSK</td></tr>
</table></td></tr>
<tr><td>3</td><td>MANCHESTER_EN</td><td>0</td><td>R/W</td><td>Enables Manchester encoding/decoding.
0 = Disable
1 = Enable</td></tr>
<tr><td>2:0</td><td>SYNC_MODE[2:0]</td><td>2 (010)</td><td>R/W</td><td>Combined sync-word qualifier mode.
The values 0 (000) and 4 (100) disables preamble and sync word transmission in TX and preamble and sync word detection in RX.
The values 1 (001), 2 (010), 5 (101) and 6 (110) enables 16-bit sync word transmission in TX and 16-bits sync word detection in RX. Only 15 of 16 bits need to match in RX when using setting 1 (001) or 5 (101). The values 3 (011) and 7 (111) enables repeated sync word transmission in TX and 32-bits sync word detection in RX (only 30 of 32 bits need to match).
<table>
<tr><th>Setting</th><th>Sync-word qualifier mode</th></tr>
<tr><td>0 (000)</td><td>No preamble/sync</td></tr>
<tr><td>1 (001)</td><td>15/16 sync word bits detected</td></tr>
<tr><td>2 (010)</td><td>16/16 sync word bits detected</td></tr>
<tr><td>3 (011)</td><td>30/32 sync word bits detected</td></tr>
<tr><td>4 (100)</td><td>No preamble/sync, carrier-sense above threshold</td></tr>
<tr><td>5 (101)</td><td>15/16 + carrier-sense above threshold</td></tr>
<tr><td>6 (110)</td><td>16/16 + carrier-sense above threshold</td></tr>
<tr><td>7 (111)</td><td>30/32 + carrier-sense above threshold</td></tr>
</table></td></tr>
</table>

0x13: MDMCFG1 – Modem Configuration

Bit	Field Name	Reset	R/W	Description
7	FEC_EN	0	R/W	Enable Forward Error Correction (FEC) with interleaving for packet payload 0 = Disable 1 = Enable (Only supported for fixed packet length mode, i.e. PKTCTRL0.LENGTH_CONFIG=0)
6:4	NUM_PREAMBLE[2:0]	2 (010)	R/W	Sets the minimum number of preamble bytes to be transmitted
3:2	Reserved		R0	
1:0	CHANSPC_E[1:0]	2 (10)	R/W	2 bit exponent of channel spacing

Setting	Number of preamble bytes
0 (000)	2
1 (001)	3
2 (010)	4
3 (011)	6
4 (100)	8
5 (101)	12
6 (110)	16
7 (111)	24

0x14: MDMCFG0 – Modem Configuration

Bit	Field Name	Reset	R/W	Description
7:0	CHANSPC_M[7:0]	248 (0xF8)	R/W	8-bit mantissa of channel spacing. The channel spacing is multiplied by the channel number CHAN and added to the base frequency. It is unsigned and has the format: $\Delta f_{CHANNEL} = \frac{f_{XOSC}}{2^{18}} \cdot (256 + CHANSPC_M) \cdot 2^{CHANSPC_E}$ The default values give 199.951 kHz channel spacing (the closest setting to 200 kHz), assuming 26.0 MHz crystal frequency.

0x15: DEVIATN – Modem Deviation Setting

Bit	Field Name	Reset	R/W	Description
7	Reserved		R0	
6:4	DEVIATION_E[2:0]	4 (100)	R/W	Deviation exponent
3	Reserved		R0	
2:0	DEVIATION_M[2:0]	7 (111)	R/W	When MSK modulation is enabled: Sets fraction of symbol period used for phase change. Refer to the SmartRF® Studio software [5] for correct DEVIATN setting when using MSK. When 2-FSK/GFSK modulation is enabled: Deviation mantissa, interpreted as a 4-bit value with MSB implicit 1. The resulting deviation is given by: $f_{dev} = \frac{f_{xosc}}{2^{17}} \cdot (8 + DEVIATION_M) \cdot 2^{DEVIATION_E}$ The default values give ±47.607 kHz deviation, assuming 26.0 MHz crystal frequency.

0x16: MCSM2 – Main Radio Control State Machine Configuration

Bit	Field Name	Reset	R/W	Description
7:5	Reserved		R0	Reserved
4	RX_TIME_RSSI	0	R/W	Direct RX termination based on RSSI measurement (carrier sense).
3	RX_TIME_QUAL	0	R/W	When the RX_TIME timer expires the chip stays in RX mode if sync word is found when RX_TIME_QUAL=0, or either sync word is found or PQT is set when RX_TIME_QUAL=1.
2:0	RX_TIME[2:0]	7 (111)	R/W	Timeout for sync word search in RX for both WOR mode and normal RX operation. The timeout is relative to the programmed EVENT0 timeout.

The RX timeout in µs is given by EVENT0·C(RX_TIME, WOR_RES) ·26/X, where C is given by the table below and X is the crystal oscillator frequency in MHz:

RX_TIME[2:0]	WOR_RES = 0	WOR_RES = 1	WOR_RES = 2	WOR_RES = 3
0 (000)	3.6058	18.0288	32.4519	46.8750
1 (001)	1.8029	9.0144	16.2260	23.4375
2 (010)	0.9014	4.5072	8.1130	11.7188
3 (011)	0.4507	2.2536	4.0565	5.8594
4 (100)	0.2254	1.1268	2.0282	2.9297
5 (101)	0.1127	0.5634	1.0141	1.4648
6 (110)	0.0563	0.2817	0.5071	0.7324
7 (111)	Until end of packet			

As an example, EVENT0=34666, WOR_RES=0 and RX_TIME=6 corresponds to 1.95 ms RX timeout, 1 s polling interval and 0.195% duty cycle. Note that WOR_RES should be 0 or 1 when using WOR because using WOR_RES > 1 will give a very low duty cycle. In applications where WOR is not used all settings of WOR_RES can be used.

The duty cycle using WOR is approximated by:

RX_TIME[2:0]	WOR_RES = 0	WOR_RES = 1
0 (000)	12.50%	1.95%
1 (001)	6.250%	9765 ppm
2 (010)	3.125%	4883 ppm
3 (011)	1.563%	2441 ppm
4 (100)	0.781%	NA
5 (101)	0.391%	NA
6 (110)	0.195%	NA
7 (111)	NA	

Note that the RC oscillator must be enabled in order to use setting 0-6, because the timeout counts RC oscillator periods. WOR mode does not need to be enabled.
The timeout counter resolution is limited: With RX_TIME=0, the timeout count is given by the 13 MSBs of EVENT0, decreasing to the 7 MSBs of EVENT0 with RX_TIME=6.

0x17: MCSM1 – Main Radio Control State Machine Configuration

<table>
<tr><th>Bit</th><th>Field Name</th><th>Reset</th><th>R/W</th><th>Description</th></tr>
<tr><td>7:6</td><td>Reserved</td><td></td><td>R0</td><td></td></tr>
<tr><td>5:4</td><td>CCA_MODE[1:0]</td><td>3 (11)</td><td>R/W</td><td>Selects CCA_MODE; Reflected in CCA signal
<table>
<tr><td>Setting</td><td>Clear channel indication</td></tr>
<tr><td>0 (00)</td><td>Always</td></tr>
<tr><td>1 (01)</td><td>If RSSI below threshold</td></tr>
<tr><td>2 (10)</td><td>Unless currently receiving a packet</td></tr>
<tr><td>3 (11)</td><td>If RSSI below threshold unless currently receiving a packet</td></tr>
</table></td></tr>
<tr><td>3:2</td><td>RXOFF_MODE[1:0]</td><td>0 (00)</td><td>R/W</td><td>Select what should happen when a packet has been received
<table>
<tr><td>Setting</td><td>Next state after finishing packet reception</td></tr>
<tr><td>0 (00)</td><td>IDLE</td></tr>
<tr><td>1 (01)</td><td>FSTXON</td></tr>
<tr><td>2 (10)</td><td>TX</td></tr>
<tr><td>3 (11)</td><td>Stay in RX</td></tr>
</table>
It is not possible to set RXOFF_MODE to be TX or FSTXON and at the same time use CCA.</td></tr>
<tr><td>1:0</td><td>TXOFF_MODE[1:0]</td><td>0 (00)</td><td>R/W</td><td>Select what should happen when a packet has been sent (TX)
<table>
<tr><td>Setting</td><td>Next state after finishing packet transmission</td></tr>
<tr><td>0 (00)</td><td>IDLE</td></tr>
<tr><td>1 (01)</td><td>FSTXON</td></tr>
<tr><td>2 (10)</td><td>Stay in TX (start sending preamble)</td></tr>
<tr><td>3 (11)</td><td>RX</td></tr>
</table></td></tr>
</table>

0x18: MCSM0 – Main Radio Control State Machine Configuration

<table>
<tr><th>Bit</th><th>Field Name</th><th>Reset</th><th>R/W</th><th>Description</th></tr>
<tr><td>7:6</td><td>Reserved</td><td></td><td>R0</td><td></td></tr>
<tr><td>5:4</td><td>FS_AUTOCAL[1:0]</td><td>0 (00)</td><td>R/W</td><td>Automatically calibrate when going to RX or TX, or back to IDLE
<table>
<tr><th>Setting</th><th>When to perform automatic calibration</th></tr>
<tr><td>0 (00)</td><td>Never (manually calibrate using SCAL strobe)</td></tr>
<tr><td>1 (01)</td><td>When going from IDLE to RX or TX (or FSTXON)</td></tr>
<tr><td>2 (10)</td><td>When going from RX or TX back to IDLE automatically</td></tr>
<tr><td>3 (11)</td><td>Every 4th time when going from RX or TX to IDLE automatically</td></tr>
</table>
In some automatic wake-on-radio (WOR) applications, using setting 3 (11) can significantly reduce current consumption.</td></tr>
<tr><td>3:2</td><td>PO_TIMEOUT</td><td>1 (01)</td><td>R/W</td><td>Programs the number of times the six-bit ripple counter must expire after XOSC has stabilized before CHP_RDYn goes low.

If XOSC is on (stable) during power-down, PO_TIMEOUT should be set so that the regulated digital supply voltage has time to stabilize before CHP_RDYn goes low (PO_TIMEOUT=2 recommended). Typical start-up time for the voltage regulator is 50 us.

If XOSC is off during power-down and the regulated digital supply voltage has sufficient time to stabilize while waiting for the crystal to be stable, PO_TIMEOUT can be set to 0. For robust operation it is recommended to use PO_TIMEOUT=2.
<table>
<tr><th>Setting</th><th>Expire count</th><th>Timeout after XOSC start</th></tr>
<tr><td>0 (00)</td><td>1</td><td>Approx. 2.3 – 2.4 µs</td></tr>
<tr><td>1 (01)</td><td>16</td><td>Approx. 37 – 39 µs</td></tr>
<tr><td>2 (10)</td><td>64</td><td>Approx. 149 – 155 µs</td></tr>
<tr><td>3 (11)</td><td>256</td><td>Approx. 597 – 620 µs</td></tr>
</table>
Exact timeout depends on crystal frequency.</td></tr>
<tr><td>1</td><td>PIN_CTRL_EN</td><td>0</td><td>R/W</td><td>Enables the pin radio control option</td></tr>
<tr><td>0</td><td>XOSC_FORCE_ON</td><td>0</td><td>R/W</td><td>Force the XOSC to stay on in the SLEEP state.</td></tr>
</table>

0x19: FOCCFG – Frequency Offset Compensation Configuration

<table>
<tr><th>Bit</th><th>Field Name</th><th>Reset</th><th>R/W</th><th>Description</th></tr>
<tr><td>7:6</td><td>Reserved</td><td></td><td>R0</td><td></td></tr>
<tr><td>5</td><td>FOC_BS_CS_GATE</td><td>1</td><td>R/W</td><td>If set, the demodulator freezes the frequency offset compensation and clock recovery feedback loops until the CARRIER_SENSE signal goes high.</td></tr>
<tr><td>4:3</td><td>FOC_PRE_K[1:0]</td><td>2 (10)</td><td>R/W</td><td>The frequency compensation loop gain to be used before a sync word is detected.
<table>
<tr><th>Setting</th><th>Freq. compensation loop gain before sync word</th></tr>
<tr><td>0 (00)</td><td>K</td></tr>
<tr><td>1 (01)</td><td>2K</td></tr>
<tr><td>2 (10)</td><td>3K</td></tr>
<tr><td>3 (11)</td><td>4K</td></tr>
</table></td></tr>
<tr><td>2</td><td>FOC_POST_K</td><td>1</td><td>R/W</td><td>The frequency compensation loop gain to be used after a sync word is detected.
<table>
<tr><th>Setting</th><th>Freq. compensation loop gain after sync word</th></tr>
<tr><td>0</td><td>Same as FOC_PRE_K</td></tr>
<tr><td>1</td><td>K/2</td></tr>
</table></td></tr>
<tr><td>1:0</td><td>FOC_LIMIT[1:0]</td><td>2 (10)</td><td>R/W</td><td>The saturation point for the frequency offset compensation algorithm:
<table>
<tr><th>Setting</th><th>Saturation point (max compensated offset)</th></tr>
<tr><td>0 (00)</td><td>±0 (no frequency offset compensation)</td></tr>
<tr><td>1 (01)</td><td>$\pm BW_{CHAN}/8$</td></tr>
<tr><td>2 (10)</td><td>$\pm BW_{CHAN}/4$</td></tr>
<tr><td>3 (11)</td><td>$\pm BW_{CHAN}/2$</td></tr>
</table>
Frequency offset compensation is not supported for OOK; Always use FOC_LIMIT=0 with this modulation format.</td></tr>
</table>

0x1A: BSCFG – Bit Synchronization Configuration

<table>
<tr><th>Bit</th><th>Field Name</th><th>Reset</th><th>R/W</th><th>Description</th></tr>
<tr><td>7:6</td><td>BS_PRE_KI[1:0]</td><td>1 (01)</td><td>R/W</td><td>The clock recovery feedback loop integral gain to be used before a sync word is detected (used to correct offsets in data rate):
<table>
<tr><th>Setting</th><th>Clock recovery loop integral gain before sync word</th></tr>
<tr><td>0 (00)</td><td>K_I</td></tr>
<tr><td>1 (01)</td><td>$2K_I$</td></tr>
<tr><td>2 (10)</td><td>$3K_I$</td></tr>
<tr><td>3 (11)</td><td>$4K_I$</td></tr>
</table></td></tr>
<tr><td>5:4</td><td>BS_PRE_KP[1:0]</td><td>2 (10)</td><td>R/W</td><td>The clock recovery feedback loop proportional gain to be used before a sync word is detected.
<table>
<tr><th>Setting</th><th>Clock recovery loop proportional gain before sync word</th></tr>
<tr><td>0 (00)</td><td>K_P</td></tr>
<tr><td>1 (01)</td><td>$2K_P$</td></tr>
<tr><td>2 (10)</td><td>$3K_P$</td></tr>
<tr><td>3 (11)</td><td>$4K_P$</td></tr>
</table></td></tr>
<tr><td>3</td><td>BS_POST_KI</td><td>1</td><td>R/W</td><td>The clock recovery feedback loop integral gain to be used after a sync word is detected.
<table>
<tr><th>Setting</th><th>Clock recovery loop integral gain after sync word</th></tr>
<tr><td>0</td><td>Same as BS_PRE_KI</td></tr>
<tr><td>1</td><td>$K_I/2$</td></tr>
</table></td></tr>
<tr><td>2</td><td>BS_POST_KP</td><td>1</td><td>R/W</td><td>The clock recovery feedback loop proportional gain to be used after a sync word is detected.
<table>
<tr><th>Setting</th><th>Clock recovery loop proportional gain after sync word</th></tr>
<tr><td>0</td><td>Same as BS_PRE_KP</td></tr>
<tr><td>1</td><td>K_P</td></tr>
</table></td></tr>
<tr><td>1:0</td><td>BS_LIMIT[1:0]</td><td>0 (00)</td><td>R/W</td><td>The saturation point for the data rate offset compensation algorithm:
<table>
<tr><th>Setting</th><th>Data rate offset saturation (max data rate difference)</th></tr>
<tr><td>0 (00)</td><td>±0 (No data rate offset compensation performed)</td></tr>
<tr><td>1 (01)</td><td>±3.125% data rate offset</td></tr>
<tr><td>2 (10)</td><td>±6.25% data rate offset</td></tr>
<tr><td>3 (11)</td><td>±12.5% data rate offset</td></tr>
</table></td></tr>
</table>

0x1B: AGCCTRL2 – AGC Control

<table>
<tr><th>Bit</th><th>Field Name</th><th>Reset</th><th>R/W</th><th>Description</th></tr>
<tr><td>7:6</td><td>MAX_DVGA_GAIN[1:0]</td><td>0 (00)</td><td>R/W</td><td>Reduces the maximum allowable DVGA gain.
<table>
<tr><th>Setting</th><th>Allowable DVGA settings</th></tr>
<tr><td>0 (00)</td><td>All gain settings can be used</td></tr>
<tr><td>1 (01)</td><td>The highest gain setting can not be used</td></tr>
<tr><td>2 (10)</td><td>The 2 highest gain settings can not be used</td></tr>
<tr><td>3 (11)</td><td>The 3 highest gain settings can not be used</td></tr>
</table></td></tr>
<tr><td>5:3</td><td>MAX_LNA_GAIN[2:0]</td><td>0 (000)</td><td>R/W</td><td>Sets the maximum allowable LNA + LNA 2 gain relative to the maximum possible gain.
<table>
<tr><th>Setting</th><th>Maximum allowable LNA + LNA 2 gain</th></tr>
<tr><td>0 (000)</td><td>Maximum possible LNA + LNA 2 gain</td></tr>
<tr><td>1 (001)</td><td>Approx. 2.6 dB below maximum possible gain</td></tr>
<tr><td>2 (010)</td><td>Approx. 6.1 dB below maximum possible gain</td></tr>
<tr><td>3 (011)</td><td>Approx. 7.4 dB below maximum possible gain</td></tr>
<tr><td>4 (100)</td><td>Approx. 9.2 dB below maximum possible gain</td></tr>
<tr><td>5 (101)</td><td>Approx. 11.5 dB below maximum possible gain</td></tr>
<tr><td>6 (110)</td><td>Approx. 14.6 dB below maximum possible gain</td></tr>
<tr><td>7 (111)</td><td>Approx. 17.1 dB below maximum possible gain</td></tr>
</table></td></tr>
<tr><td>2:0</td><td>MAGN_TARGET[2:0]</td><td>3 (011)</td><td>R/W</td><td>These bits set the target value for the averaged amplitude from the digital channel filter (1 LSB = 0 dB).
<table>
<tr><th>Setting</th><th>Target amplitude from channel filter</th></tr>
<tr><td>0 (000)</td><td>24 dB</td></tr>
<tr><td>1 (001)</td><td>27 dB</td></tr>
<tr><td>2 (010)</td><td>30 dB</td></tr>
<tr><td>3 (011)</td><td>33 dB</td></tr>
<tr><td>4 (100)</td><td>36 dB</td></tr>
<tr><td>5 (101)</td><td>38 dB</td></tr>
<tr><td>6 (110)</td><td>40 dB</td></tr>
<tr><td>7 (111)</td><td>42 dB</td></tr>
</table></td></tr>
</table>

0x1C: AGCCTRL1 – AGC Control

<table>
<tr><th>Bit</th><th>Field Name</th><th>Reset</th><th>R/W</th><th>Description</th></tr>
<tr><td>7</td><td>Reserved</td><td></td><td>R0</td><td></td></tr>
<tr><td>6</td><td>AGC_LNA_PRIORITY</td><td>1</td><td>R/W</td><td>Selects between two different strategies for LNA and LNA2 gain adjustment. When 1, the LNA gain is decreased first. When 0, the LNA2 gain is decreased to minimum before decreasing LNA gain.</td></tr>
<tr><td>5:4</td><td>CARRIER_SENSE_REL_THR[1:0]</td><td>0 (00)</td><td>R/W</td><td>Sets the relative change threshold for asserting carrier sense.
<table>
<tr><th>Setting</th><th>Carrier sense relative threshold</th></tr>
<tr><td>0 (00)</td><td>Relative carrier sense threshold disabled</td></tr>
<tr><td>1 (01)</td><td>6 dB increase in RSSI value</td></tr>
<tr><td>2 (10)</td><td>10 dB increase in RSSI value</td></tr>
<tr><td>3 (11)</td><td>14 dB increase in RSSI value</td></tr>
</table></td></tr>
<tr><td>3:0</td><td>CARRIER_SENSE_ABS_THR[3:0]</td><td>0 (0000)</td><td>R/W</td><td>Sets the absolute RSSI threshold for asserting carrier sense. The 2’s complement signed threshold is programmed in steps of 1 dB and is relative to the MAGN_TARGET setting.
<table>
<tr><th>Setting</th><th>Carrier sense absolute threshold
(Equal to channel filter amplitude when AGC has not decreased gain)</th></tr>
<tr><td>-8 (1000)</td><td>Absolute carrier sense threshold disabled</td></tr>
<tr><td>-7 (1001)</td><td>7 dB below MAGN_TARGET setting</td></tr>
<tr><td>…</td><td>…</td></tr>
<tr><td>-1 (1111)</td><td>1 dB below MAGN_TARGET setting</td></tr>
<tr><td>0 (0000)</td><td>At MAGN_TARGET setting</td></tr>
<tr><td>1 (0001)</td><td>1 dB above MAGN_TARGET setting</td></tr>
<tr><td>…</td><td>…</td></tr>
<tr><td>7 (0111)</td><td>7 dB above MAGN_TARGET setting</td></tr>
</table></td></tr>
</table>

0x1D: AGCCTRL0 – AGC Control

<table>
<tr><th>Bit</th><th>Field Name</th><th>Reset</th><th>R/W</th><th>Description</th></tr>
<tr><td>7:6</td><td>HYST_LEVEL[1:0]</td><td>2 (10)</td><td>R/W</td><td>Sets the level of hysteresis on the magnitude deviation (internal AGC signal that determines gain changes).
<table>
<tr><th>Setting</th><th>Description</th></tr>
<tr><td>0 (00)</td><td>No hysteresis, small symmetric dead zone, high gain</td></tr>
<tr><td>1 (01)</td><td>Low hysteresis, small asymmetric dead zone, medium gain</td></tr>
<tr><td>2 (10)</td><td>Medium hysteresis, medium asymmetric dead zone, medium gain</td></tr>
<tr><td>3 (11)</td><td>Large hysteresis, large asymmetric dead zone, low gain</td></tr>
</table></td></tr>
<tr><td>5:4</td><td>WAIT_TIME[1:0]</td><td>1 (01)</td><td>R/W</td><td>Sets the number of channel filter samples from a gain adjustment has been made until the AGC algorithm starts accumulating new samples.
<table>
<tr><th>Setting</th><th>Channel filter samples</th></tr>
<tr><td>0 (00)</td><td>8</td></tr>
<tr><td>1 (01)</td><td>16</td></tr>
<tr><td>2 (10)</td><td>24</td></tr>
<tr><td>3 (11)</td><td>32</td></tr>
</table></td></tr>
<tr><td>3:2</td><td>AGC_FREEZE[1:0]</td><td>0 (00)</td><td>R/W</td><td>Controls when the AGC gain should be frozen.
<table>
<tr><th>Setting</th><th>Function</th></tr>
<tr><td>0 (00)</td><td>Normal operation. Always adjust gain when required.</td></tr>
<tr><td>1 (01)</td><td>The gain setting is frozen when a sync word has been found.</td></tr>
<tr><td>2 (10)</td><td>Manually freezes the analog gain setting and continue to adjust the digital gain.</td></tr>
<tr><td>3 (11)</td><td>Manually freezes both the analog and the digital gain settings. Used for manually overriding the gain.</td></tr>
</table></td></tr>
<tr><td>1:0</td><td>FILTER_LENGTH[1:0]</td><td>1 (01)</td><td>R/W</td><td>Sets the averaging length for the amplitude from the channel filter. Sets the OOK decision boundary for OOK reception.
<table>
<tr><th>Setting</th><th>Channel filter samples</th><th>OOK decision</th></tr>
<tr><td>0 (00)</td><td>8</td><td>4 dB</td></tr>
<tr><td>1 (01)</td><td>16</td><td>8 dB</td></tr>
<tr><td>2 (10)</td><td>32</td><td>12 dB</td></tr>
<tr><td>3 (11)</td><td>64</td><td>16 dB</td></tr>
</table></td></tr>
</table>

0x1E: WOREVT1 – High Byte Event0 Timeout

Bit	Field Name	Reset	R/W	Description
7:0	EVENT0[15:8]	135 (0x87)	R/W	High byte of Event 0 timeout register $t_{Event0} = \frac{750}{f_{XOSC}} \cdot EVENT0 \cdot 2^{5 \cdot WOR_RES}$

0x1F: WOREVT0 – Low Byte Event0 Timeout

Bit	Field Name	Reset	R/W	Description
7:0	EVENT0[7:0]	107 (0x6B)	R/W	Low byte of Event 0 timeout register. The default Event 0 value gives 1.0 s timeout, assuming a 26.0 MHz crystal.

0x20: WORCTRL – Wake On Radio Control

Bit	Field Name	Reset	R/W	Description
7	RC_PD	1	R/W	Power down signal to RC oscillator. When written to 0, automatic initial calibration will be performed
6:4	EVENT1[2:0]	7 (111)	R/W	Timeout setting from register block. Decoded to Event 1 timeout. RC oscillator clock frequency equals F_{XOSC}/750, which is 34.7-36 kHz, depending on crystal frequency. The table below lists the number of clock periods after Event 0 before Event 1 times out. Setting / t_event1: 0 (000) – 4 (0.111 – 0.115 ms) 1 (001) – 6 (0.167 – 0.173 ms) 2 (010) – 8 (0.222 – 0.230 ms) 3 (011) – 12 (0.333 – 0.346 ms) 4 (100) – 16 (0.444 – 0.462 ms) 5 (101) – 24 (0.667 – 0.692 ms) 6 (110) – 32 (0.889 – 0.923 ms) 7 (111) – 48 (1.333 – 1.385 ms)
3	RC_CAL	1	R/W	Enables (1) or disables (0) the RC oscillator calibration.
2	Reserved		R0	
1:0	WOR_RES[1:0]	0 (00)	R/W	Controls the Event 0 resolution as well as maximum timeout of the WOR module and maximum timeout under normal RX operation: Setting / Resolution (1 LSB) / Max timeout: 0 (00) – 1 period (28 – 29 µs) – 1.8 – 1.9 seconds 1 (01) – 2^5 periods (0.89 – 0.92 ms) – 58 – 61 seconds 2 (10) – 2^{10} periods (28 – 30 ms) – 31 – 32 minutes 3 (11) – 2^{15} periods (0.91 – 0.94 s) – 16.5 – 17.2 hours Note that WOR_RES should be 0 or 1 when using WOR because WOR_RES > 1 will give a very low duty cycle. In normal RX operation all settings of WOR_RES can be used.

0x21: FREND1 – Front End RX Configuration

Bit	Field Name	Reset	R/W	Description
7:6	LNA_CURRENT[1:0]	1 (01)	R/W	Adjusts front-end LNA PTAT current output
5:4	LNA2MIX_CURRENT[1:0]	1 (01)	R/W	Adjusts front-end PTAT outputs
3:2	LODIV_BUF_CURRENT_RX[1:0]	1 (01)	R/W	Adjusts current in RX LO buffer (LO input to mixer)
1:0	MIX_CURRENT[1:0]	2 (10)	R/W	Adjusts current in mixer

0x22: FREND0 – Front End TX configuration

Bit	Field Name	Reset	R/W	Description
7:6	Reserved		R0	
5:4	LODIV_BUF_CURRENT_TX[1:0]	1 (01)	R/W	Adjusts current TX LO buffer (input to PA). The value to use in this field is given by the SmartRF® Studio software [5].
3	Reserved		R0	
2:0	PA_POWER[2:0]	0 (000)	R/W	Selects PA power setting. This value is an index to the PATABLE. In OOK mode, this selects the PATABLE index to use when transmitting a '1'. PATABLE index zero is used in OOK when transmitting a '0'.

0x23: FSCAL3 – Frequency Synthesizer Calibration

Bit	Field Name	Reset	R/W	Description
7:6	FSCAL3[7:6]	2 (10)	R/W	Frequency synthesizer calibration configuration. The value to write in this register before calibration is given by the SmartRF® Studio software [5].
5:4	CHP_CURR_CAL_EN[1:0]	2 (10)	R/W	Disable charge pump calibration stage when 0
3:0	FSCAL3[3:0]	9 (1001)	R/W	Frequency synthesizer calibration result register. Digital bit vector defining the charge pump output current, on an exponential scale: $I_{OUT}=I_0 \cdot 2^{FSCAL3[3:0]/4}$ Fast frequency hopping without calibration for each hop can be done by calibrating upfront for each frequency and saving the resulting FSCAL3, FSCAL2 and FSCAL1 register values. Between each frequency hop, calibration can be replaced by writing the FSCAL3, FSCAL2 and FSCAL1 register values corresponding to the next RF frequency.

0x24: FSCAL2 – Frequency Synthesizer Calibration

Bit	Field Name	Reset	R/W	Description
7:6	Reserved		R0	
5	VCO_CORE_H_EN	0	R/W	Choose high (1) / low (0) VCO
4:0	FSCAL2[4:0]	10 (0x0A)	R/W	Frequency synthesizer calibration result register. VCO current calibration result and override value Fast frequency hopping without calibration for each hop can be done by calibrating upfront for each frequency and saving the resulting FSCAL3, FSCAL2 and FSCAL1 register values. Between each frequency hop, calibration can be replaced by writing the FSCAL3, FSCAL2 and FSCAL1 register values corresponding to the next RF frequency.

0x25: FSCAL1 – Frequency Synthesizer Calibration

Bit	Field Name	Reset	R/W	Description
7:6	Reserved		R0	
5:0	FSCAL1[5:0]	32 (0x20)	R/W	Frequency synthesizer calibration result register. Capacitor array setting for VCO coarse tuning. Fast frequency hopping without calibration for each hop can be done by calibrating upfront for each frequency and saving the resulting FSCAL3, FSCAL2 and FSCAL1 register values. Between each frequency hop, calibration can be replaced by writing the FSCAL3, FSCAL2 and FSCAL1 register values corresponding to the next RF frequency.

0x26: FSCAL0 – Frequency Synthesizer Calibration

Bit	Field Name	Reset	R/W	Description
7	Reserved		R0	
6:0	FSCAL0[6:0]	13 (0x0D)	R/W	Frequency synthesizer calibration control. The value to use in this register is given by the SmartRF® Studio software [5].

0x27: RCCTRL1 – RC Oscillator Configuration

Bit	Field Name	Reset	R/W	Description
7	Reserved	0	R0	
6:0	RCCTRL1[6:0]	65 (0x41)	R/W	RC oscillator configuration.

0x28: RCCTRL0 – RC Oscillator Configuration

Bit	Field Name	Reset	R/W	Description
7	Reserved	0	R0	
6:0	RCCTRL0[6:0]	0 (0x00)	R/W	RC oscillator configuration.

32.2 Configuration Register Details – Registers that Lose Programming in SLEEP State

0x29: FSTEST – Frequency Synthesizer Calibration Control

Bit	Field Name	Reset	R/W	Description
7:0	FSTEST[7:0]	89 (0x59)	R/W	For test only. Do not write to this register.

0x2A: PTEST – Production Test

Bit	Field Name	Reset	R/W	Description
7:0	PTEST[7:0]	127 (0x7F)	R/W	Writing 0xBF to this register makes the on-chip temperature sensor available in the IDLE state. The default 0x7F value should then be written back before leaving the IDLE state. Other use of this register is for test only.

0x2B: AGCTEST – AGC Test

Bit	Field Name	Reset	R/W	Description
7:0	AGCTEST[7:0]	63 (0x3F)	R/W	For test only. Do not write to this register.

0x2C: TEST2 – Various Test Settings

Bit	Field Name	Reset	R/W	Description
7:0	TEST2[7:0]	136 (0x88)	R/W	Set to 0x81 for improved sensitivity at data rates ≤100 kBaud. The temperature range is then from 0°C to +85°C.

0x2D: TEST1 – Various Test Settings

Bit	Field Name	Reset	R/W	Description
7:0	TEST1[7:0]	49 (0x31)	R/W	Set to 0x35 for improved sensitivity at data rates ≤100 kBaud. The temperature range is then from 0°C to +85°C.

0x2E: TEST0 – Various Test Settings

Bit	Field Name	Reset	R/W	Description
7:2	TEST0[7:2]	2 (0x02)	R/W	The value to use in this register is given by the SmartRF® Studio software [5].
1	VCO_SEL_CAL_EN	1	R/W	Enable VCO selection calibration stage when 1
0	TEST0[0]	1	R/W	The value to use in this register is given by the SmartRF® Studio software [5].

32.3 Status Register Details

0x30 (0xF0): PARTNUM – Chip ID

Bit	Field Name	Reset	R/W	Description
7:0	PARTNUM[7:0]	128 (0x80)	R	Chip part number

0x31 (0xF1): VERSION – Chip ID

Bit	Field Name	Reset	R/W	Description
7:0	VERSION[7:0]	3 (0x03)	R	Chip version number.

0x32 (0xF2): FREQEST – Frequency Offset Estimate from Demodulator

Bit	Field Name	Reset	R/W	Description
7:0	FREQOFF_EST		R	The estimated frequency offset (2's complement) of the carrier. Resolution is $F_{XTAL}/2^{14}$ (1.59 - 1.65 kHz); range is ±202 kHz to ±210 kHz, dependent of XTAL frequency. Frequency offset compensation is only supported for 2-FSK; GFSK and MSK modulation. This register will read 0 when using OOK modulation.

0x33 (0xF3): LQI – Demodulator Estimate for Link Quality

Bit	Field Name	Reset	R/W	Description
7	CRC_OK		R	The last CRC comparison matched. Cleared when entering/restarting RX mode. Only valid if PKTCTRL0.CC2400_EN=1.
6:0	LQI_EST[6:0]		R	The Link Quality Indicator estimates how easily a received signal can be demodulated. Calculated over the 64 symbols following the sync word.

0x34 (0xF4): RSSI – Received Signal Strength Indication

Bit	Field Name	Reset	R/W	Description
7:0	RSSI		R	Received signal strength indicator

0x35 (0xF5): MARCSTATE – Main Radio Control State Machine State

Bit	Field Name	Reset	R/W	Description
7:5	Reserved		R0	
4:0	MARC_STATE[4:0]		R	Main Radio Control FSM State

Value	State name	State (Figure 15, page 39)
0 (0x00)	SLEEP	SLEEP
1 (0x01)	IDLE	IDLE
2 (0x02)	XOFF	XOFF
3 (0x03)	VCOON_MC	MANCAL
4 (0x04)	REGON_MC	MANCAL
5 (0x05)	MANCAL	MANCAL
6 (0x06)	VCOON	FS_WAKEUP
7 (0x07)	REGON	FS_WAKEUP
8 (0x08)	STARTCAL	CALIBRATE
9 (0x09)	BWBOOST	SETTLING
10 (0x0A)	FS_LOCK	SETTLING
11 (0x0B)	IFADCON	SETTLING
12 (0x0C)	ENDCAL	CALIBRATE
13 (0x0D)	RX	RX
14 (0x0E)	RX_END	RX
15 (0x0F)	RX_RST	RX
16 (0x10)	TXRX_SWITCH	TXRX_SETTLING
17 (0x11)	RXFIFO_OVERFLOW	RXFIFO_OVERFLOW
18 (0x12)	FSTXON	FSTXON
19 (0x13)	TX	TX
20 (0x14)	TX_END	TX
21 (0x15)	RXTX_SWITCH	RXTX_SETTLING
22 (0x16)	TXFIFO_UNDERFLOW	TXFIFO_UNDERFLOW

Note: it is not possible to read back the SLEEP or XOFF state numbers because setting CSn low will make the chip enter the IDLE mode from the SLEEP or XOFF states.

0x36 (0xF6): WORTIME1 – High Byte of WOR Time

Bit	Field Name	Reset	R/W	Description
7:0	TIME[15:8]		R	High byte of timer value in WOR module

0x37 (0xF7): WORTIME0 – Low Byte of WOR Time

Bit	Field Name	Reset	R/W	Description
7:0	TIME[7:0]		R	Low byte of timer value in WOR module

0x38 (0xF8): PKTSTATUS – Current GDOx Status and Packet Status

Bit	Field Name	Reset	R/W	Description
7	CRC_OK		R	The last CRC comparison matched. Cleared when entering/restarting RX mode. Only valid if PKTCTRL0.CC2400_EN=1.
6	CS		R	Carrier sense
5	PQT_REACHED		R	Preamble Quality reached
4	CCA		R	Channel is clear
3	SFD		R	Sync word found
2	GDO2		R	Current GDO2 value. Note: the reading gives the non-inverted value irrespective what IOCFG2.GDO2_INV is programmed to. It is not recommended to check for PLL lock by reading PKTSTATUS[2] with GDO2_CFG=0x0A.
1	Reserved		R0	
0	GDO0		R	Current GDO0 value. Note: the reading gives the non-inverted value irrespective what IOCFG0.GDO0_INV is programmed to. It is not recommended to check for PLL lock by reading PKTSTATUS[0] with GDO0_CFG=0x0A.

0x39 (0xF9): VCO_VC_DAC – Current Setting from PLL Calibration Module

Bit	Field Name	Reset	R/W	Description
7:0	VCO_VC_DAC[7:0]		R	Status register for test only

0x3A (0xFA): TXBYTES – Underflow and Number of Bytes

Bit	Field Name	Reset	R/W	Description
7	TXFIFO_UNDERFLOW		R	
6:0	NUM_TXBYTES		R	Number of bytes in TX FIFO

0x3B (0xFB): RXBYTES – Underflow and Number of Bytes

Bit	Field Name	Reset	R/W	Description
7	RXFIFO_OVERFLOW		R	
6:0	NUM_RXBYTES		R	Number of bytes in RX FIFO

0x3C (0xFC): RCCTRL1_STATUS – Last RC Oscillator Calibration Result

Bit	Field Name	Reset	R/W	Description
7	Reserved		R0	
6:0	RCCTRL1_STATUS[6:0]		R	Contains the value from the last run of the RC oscillator calibration routine. For usage description refer to AN047 [3].

0x3D (0xFC): RCCTRL0_STATUS – Last RC Oscillator Calibration Result

Bit	Field Name	Reset	R/W	Description
7	Reserved		R0	
6:0	RCCTRL0_STATUS[6:0]		R	Contains the value from the last run of the RC oscillator calibration routine. For usage description refer to AN047 [3].

33 Package Description (QFN 20)

33.1 Recommended PCB Layout for Package (QFN 20)

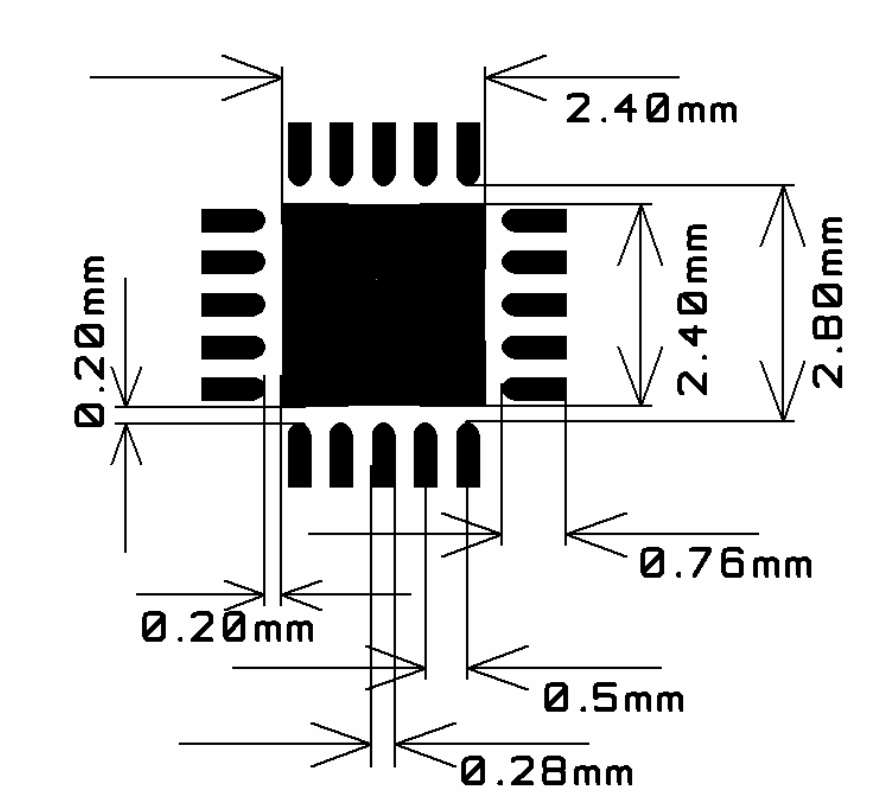

Figure 30: Recommended PCB Layout for QFN 20 Package

Note: The figure is an illustration only and not to scale. There are five 10 mil diameter via holes distributed symmetrically in the ground pad under the package. See also the CC2500EM reference design [4].

33.2 Soldering Information

The recommendations for lead-free reflow in IPC/JEDE J-STD-020D should be followed.

34 Ordering Information

Orderable Device	Status (1)	Package Type	Package Drawing	Pins	Package Qty	Eco Plan (2)	Lead Finish	MSL Peak Temp (3)
CC2500RTKR	Active	QFN	RTK	20	3000	Green (RoHS & no Sb/Br)	Cu NiPdAu	LEVEL3-260C 1 YEAR
CC2500RTK	Active	QFN	RTK	20	92	Green (RoHS & no Sb/Br)	Cu NiPdAu	LEVEL3-260C 1 YEAR

Orderable Evaluation Module	Description	Minimum Order Quantity
CC2500-CC2550DK	**CC2500_CC2550** Development Kit	1
CC2500EMK	**CC1101** Development Kit	1

Figure 31: Ordering Information

(1) The marketing status values are defined as follows:
ACTIVE: Product device recommended for new designs.
LIFEBUY: TI has announced that the device will be discontinued, and a lifetime-buy period is in effect.
NRND: Not recommended for new designs. Device is in production to support existing customers, but TI does not recommend using this part in a new design.
PREVIEW: Device has been announced but is not in production. Samples may or may not be available.
OBSOLETE: TI has discontinued the production of the device.

(2) Eco Plan - The planned eco-friendly classification: Pb-Free (RoHS), Pb-Free (RoHS Exempt), or Green (RoHS & no Sb/Br) - please check http://www.ti.com/productcontent for the latest availability information and additional product content details.
TBD: The Pb-Free/Green conversion plan has not been defined.
Pb-Free (RoHS): TI's terms "Lead-Free" or "Pb-Free" mean semiconductor products that are compatible with the current RoHS requirements for all 6 substances, including the requirement that lead not exceed 0.1% by weight in homogeneous materials. Where designed to be soldered at high temperatures, TI Pb-Free products are suitable for use in specified lead-free processes.
Pb-Free (RoHS Exempt): This component has a RoHS exemption for either 1) lead-based flip-chip solder bumps used between the die and package, or 2) lead-based die adhesive used between the die and leadframe. The component is otherwise considered Pb-Free (RoHS compatible) as defined above.
Green (RoHS & no Sb/Br): TI defines "Green" to mean Pb-Free (RoHS compatible), and free of Bromine (Br) and Antimony (Sb) based flame retardants (Br or Sb do not exceed 0.1% by weight in homogeneous material)

(3) MSL, Peak Temp. -- The Moisture Sensitivity Level rating according to the JEDEC industry standard classifications, and peak solder temperature.

Important Information and Disclaimer: The information provided on this page represents TI's knowledge and belief as of the date that it is provided. TI bases its knowledge and belief on information provided by third parties, and makes no representation or warranty as to the accuracy of such information. Efforts are underway to better integrate information from third parties. TI has taken and continues to take reasonable steps to provide representative and accurate information but may not have conducted destructive testing or chemical analysis on incoming materials and chemicals. TI and TI suppliers consider certain information to be proprietary, and thus CAS numbers and other limited information may not be available for release.

In no event shall TI's liability arising out of such information exceed the total purchase price of the TI part(s) at issue in this document sold by TI to Customer on an annual basis.

35 References

[1] CC2500 Errata Notes (swrz002.pdf)

[2] AN032 2.4 GHz Regulations (swra060.pdf)

[3] AN047 CC1100/CC2500 – Wake-On-Radio (swra126.pdf)

[4] CC2500EM Reference Design 1.0 (swrr016.zip)

[5] SmartRF® Studio (swrc046.zip)

[6] CC1100 CC2500 Examples Libraries (swrc021.zip)

[7] CC1100/CC1150DK & CC2500/CC2550DK Development Kit Examples & Libraries User Manual (swru109.pdf)

[8] CC25XX Folded Dipole Reference Design (swrc065.zip)

[9] DN004 Folded Dipole Antenna for CCC25xx (swra118.pdf)

36 General Information

36.1 Document History

Revision	Date	Description/Changes
SWRS040C	2008-05-04	Updated package and ordering information.
SWRS040B	2007-05-09	kbps replaced by kBaud throughout the document. Some of the sections have been re-written to be easier to read without having any new info added. Absolute maximum supply voltage rating increased from 3.6 V to 3.9 V. FSK changed to 2-FSK throughout the document. Updates to the Abbreviation table. Updates to the Electrical Specifications section. Added ACP, OBW and blocking performance. Maximum output power changed from 0 dBm to +1 dBm. Added information about reduced link performance at n/2·crystal frequency. Added info about RX and TX latency in serial mode. Changes to the maximum RC oscillator frequency accuracy after calibration. Added info about default values after reset versus optimum register settings in the Configuration Software section. Changes to the SPI Interface Timing Requirements. Info added about $t_{sp,pd}$ The following figures have been changed: Configuration Registers Write and Read Operations, SRES Command Strobe, and Register Access Types. In the Register Access section, the address range is changed. Changes to PATABLE Access section. In the Packet Format section, preamble pattern is changed to 10101010 and info about bug related to turning off the transmitter in infinite packet length mode is added. Added info to the Frequency Offset Compensation section. Added info about the initial value of the PN9 sequence in the Data Whitening section. Added info about TX FIFO underflow state in the Packet Handling in Transmit Mode section. Added section Packet Handling in Firmware. In the PQT section a change is made as to how much the counter decreases. The RSSI value is in dBm and not dB. The whole CS Absolute Threshold section has been re-written and the equation calculating the threshold has been removed. Added info in the CCA section on what happens if the channel is not clear. Added info to the LQI section for better understanding. Removed all references to the voltage regulator in relation with the CHP_RDYn signal, as this signal is only related to the crystal. Removed references to the voltage regulator in the figures: Power-On Reset and Power-On Reset with SRES. Changes to the SI line in the Power-On Reset with SRES figure. Added info on the three automatic calibration options. Added info about minimum sleep time and references to App. Note 047 together with info about calibration of the RC oscillator. The figure Event 0 and Event 1 Relationship is changed for better readability. Info added to the RC Oscillator and Timing section related to reduced calibration time. The Output Power Programming section has been changed. Only 1 PATABLE entry used for 2-FSK/GFSK/MSK and 2 PATABLE entries used for OOK. Added info about PATABLE when entering SLEEP mode. New PA_POWER and PATABLE figure. Added section on PCB Layout Recommendations. In section General Purpose / Test Output Control Pins: Added info on GDO pins in SLEEP state. Asynchronous transparent mode is called asynchronous serial mode throughout the document. Removed comments about having to use NRZ coding in synchronous serial mode. Added info that Manchester encoding cannot be used in asynchronous serial mode. Changed number of commands strobes from 14 to 13. Added two new registers; RCCTRL1_STATUS and RCCTRL0_STATUS Changed field name and/or description of the following registers: MCSM2, MCSM0, WORCTRL, FSCAL3, FSCAL2, FSCAL1, TEST2, TEST1 and TEST0. Added references.

Revision	Date	Description/Changes
1.2 SWRS040A	2006-06-28	Added figures to table on SPI interface timing requirements. Added information about SPI read. Updates to text and included new figure in section on arbitrary length configuration. Updates to section on CRC check. Added information about CRC check when PKTCTRL0.CC2400_EN=1. Added information on RSSI update rate in section RSSI. Updates to text and included new figures in section on power-on start-up sequence. Changes to wake-on-radio current consumption figures under electrical specifications. Updates to text in section on data FIFO. Added information about how to check for PLL lock in section on VCO. Better explanation of some of the signals in table of GDO signal selection. Also added some more signals. Added section on wideband modulation not using spread spectrum under section on system considerations and guidelines. Changes to timeout for sync word search in RX in register MCSM2. Changes to wake-on-radio control register WORCTRL. WOR_RES[1:0] settings 10_b and 11_b changed to Not Applicable (NA). Added more detailed information on PO_TIMEOUT in register MCSM0. Added description of programming bits in registers FOCCFG, BSCFG, AGCCTRL0, FREND1. Changes to ordering information.
1.1	2005-10-20	MDMCFG2[7] used. 26-27 MHz crystal range. Chapter 15: description of the 2 optional append bytes. Added matching information. Added information about using a reference signal instead of a crystal. CRC can only be checked by append bytes or CRC_AUTOFLUSH. Added equation for calculating RSSI in dBm. Selectivity performance graphs added.
1.0	2005-01-24	First preliminary release.

Table 38: Document History

PACKAGING INFORMATION

Orderable Device	Status (1)	Package Type	Package Drawing	Pins	Package Qty	Eco Plan (2)	Lead/Ball Finish	MSL Peak Temp (3)	Op Temp (°C)	Device Marking (4/5)	Samples
CC2500-RTR1	ACTIVE	VQFN	RTK	20	3000	Green (RoHS & no Sb/Br)	CU NIPDAU	Level-3-260C-168 HR	-40 to 85	CC2500	Samples
CC2500-RTY1	ACTIVE	VQFN	RTK	20	92	Green (RoHS & no Sb/Br)	CU NIPDAU	Level-3-260C-168 HR	-40 to 85	CC2500	Samples
CC2500RGP	ACTIVE	QFN	RGP	20	92	Green (RoHS & no Sb/Br)	CU NIPDAU	Level-3-260C-168 HR	-40 to 85	CC2500	Samples
CC2500RGPR	ACTIVE	QFN	RGP	20	3000	Green (RoHS & no Sb/Br)	CU NIPDAU	Level-3-260C-168 HR	-40 to 85	CC2500	Samples
CC2500RTK	ACTIVE	VQFN	RTK	20	92	Green (RoHS & no Sb/Br)	CU NIPDAU	Level-3-260C-168 HR	-40 to 85	CC2500	Samples
CC2500RTKG3	ACTIVE	VQFN	RTK	20	92	Green (RoHS & no Sb/Br)	CU NIPDAU	Level-3-260C-168 HR	-40 to 85	CC2500	Samples
CC2500RTKR	ACTIVE	VQFN	RTK	20	3000	Green (RoHS & no Sb/Br)	CU NIPDAU	Level-3-260C-168 HR		CC2500	Samples
CC2500RTKRG3	ACTIVE	VQFN	RTK	20	3000	Green (RoHS & no Sb/Br)	CU NIPDAU	Level-3-260C-168 HR		CC2500	Samples

(1) The marketing status values are defined as follows:
ACTIVE: Product device recommended for new designs.
LIFEBUY: TI has announced that the device will be discontinued, and a lifetime-buy period is in effect.
NRND: Not recommended for new designs. Device is in production to support existing customers, but TI does not recommend using this part in a new design.
PREVIEW: Device has been announced but is not in production. Samples may or may not be available.
OBSOLETE: TI has discontinued the production of the device.

(2) Eco Plan - The planned eco-friendly classification: Pb-Free (RoHS), Pb-Free (RoHS Exempt), or Green (RoHS & no Sb/Br) - please check http://www.ti.com/productcontent for the latest availability information and additional product content details.
TBD: The Pb-Free/Green conversion plan has not been defined.
Pb-Free (RoHS): TI's terms "Lead-Free" or "Pb-Free" mean semiconductor products that are compatible with the current RoHS requirements for all 6 substances, including the requirement that lead not exceed 0.1% by weight in homogeneous materials. Where designed to be soldered at high temperatures, TI Pb-Free products are suitable for use in specified lead-free processes.
Pb-Free (RoHS Exempt): This component has a RoHS exemption for either 1) lead-based flip-chip solder bumps used between the die and package, or 2) lead-based die adhesive used between the die and leadframe. The component is otherwise considered Pb-Free (RoHS compatible) as defined above.
Green (RoHS & no Sb/Br): TI defines "Green" to mean Pb-Free (RoHS compatible), and free of Bromine (Br) and Antimony (Sb) based flame retardants (Br or Sb do not exceed 0.1% by weight in homogeneous material)

(3) MSL, Peak Temp. -- The Moisture Sensitivity Level rating according to the JEDEC industry standard classifications, and peak solder temperature.

(4) There may be additional marking, which relates to the logo, the lot trace code information, or the environmental category on the device.

(5) Multiple Device Markings will be inside parentheses. Only one Device Marking contained in parentheses and separated by a "~" will appear on a device. If a line is indented then it is a continuation of the previous line and the two combined represent the entire Device Marking for that device.

Important Information and Disclaimer: The information provided on this page represents TI's knowledge and belief as of the date that it is provided. TI bases its knowledge and belief on information provided by third parties, and makes no representation or warranty as to the accuracy of such information. Efforts are underway to better integrate information from third parties. TI has taken and continues to take reasonable steps to provide representative and accurate information but may not have conducted destructive testing or chemical analysis on incoming materials and chemicals. TI and TI suppliers consider certain information to be proprietary, and thus CAS numbers and other limited information may not be available for release.

In no event shall TI's liability arising out of such information exceed the total purchase price of the TI part(s) at issue in this document sold by TI to Customer on an annual basis.

TAPE AND REEL INFORMATION

REEL DIMENSIONS

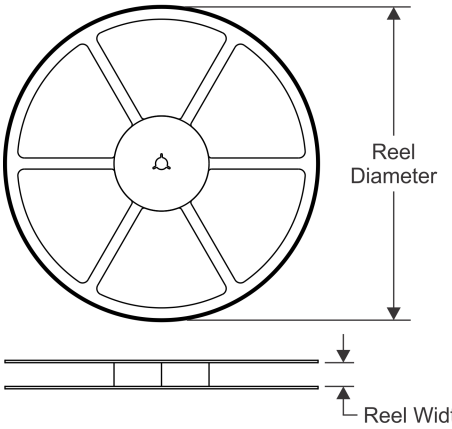

TAPE DIMENSIONS

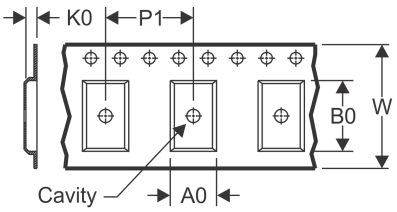

A0	Dimension designed to accommodate the component width
B0	Dimension designed to accommodate the component length
K0	Dimension designed to accommodate the component thickness
W	Overall width of the carrier tape
P1	Pitch between successive cavity centers

QUADRANT ASSIGNMENTS FOR PIN 1 ORIENTATION IN TAPE

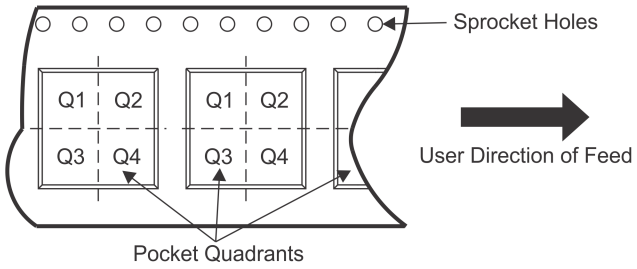

*All dimensions are nominal

Device	Package Type	Package Drawing	Pins	SPQ	Reel Diameter (mm)	Reel Width W1 (mm)	A0 (mm)	B0 (mm)	K0 (mm)	P1 (mm)	W (mm)	Pin1 Quadrant
CC2500RGPR	QFN	RGP	20	3000	330.0	12.4	4.3	4.3	1.5	8.0	12.0	Q2
CC2500RTKR	VQFN	RTK	20	3000	330.0	12.4	4.3	4.3	1.5	8.0	12.0	Q2

TAPE AND REEL BOX DIMENSIONS

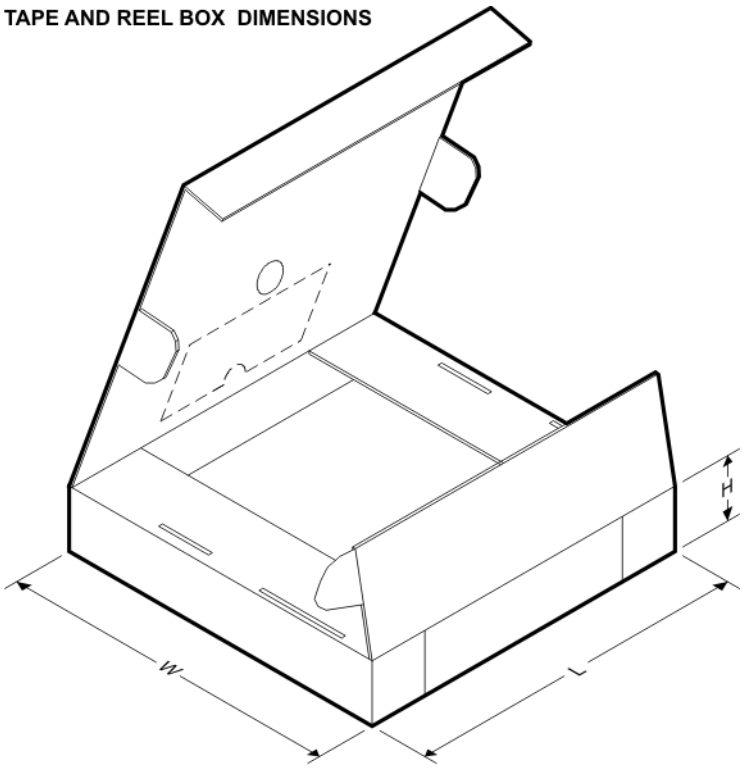

*All dimensions are nominal

Device	Package Type	Package Drawing	Pins	SPQ	Length (mm)	Width (mm)	Height (mm)
CC2500RGPR	QFN	RGP	20	3000	338.1	338.1	20.6
CC2500RTKR	VQFN	RTK	20	3000	338.1	338.1	20.6

RGP (S–PVQFN–N20) PLASTIC QUAD FLATPACK NO–LEAD

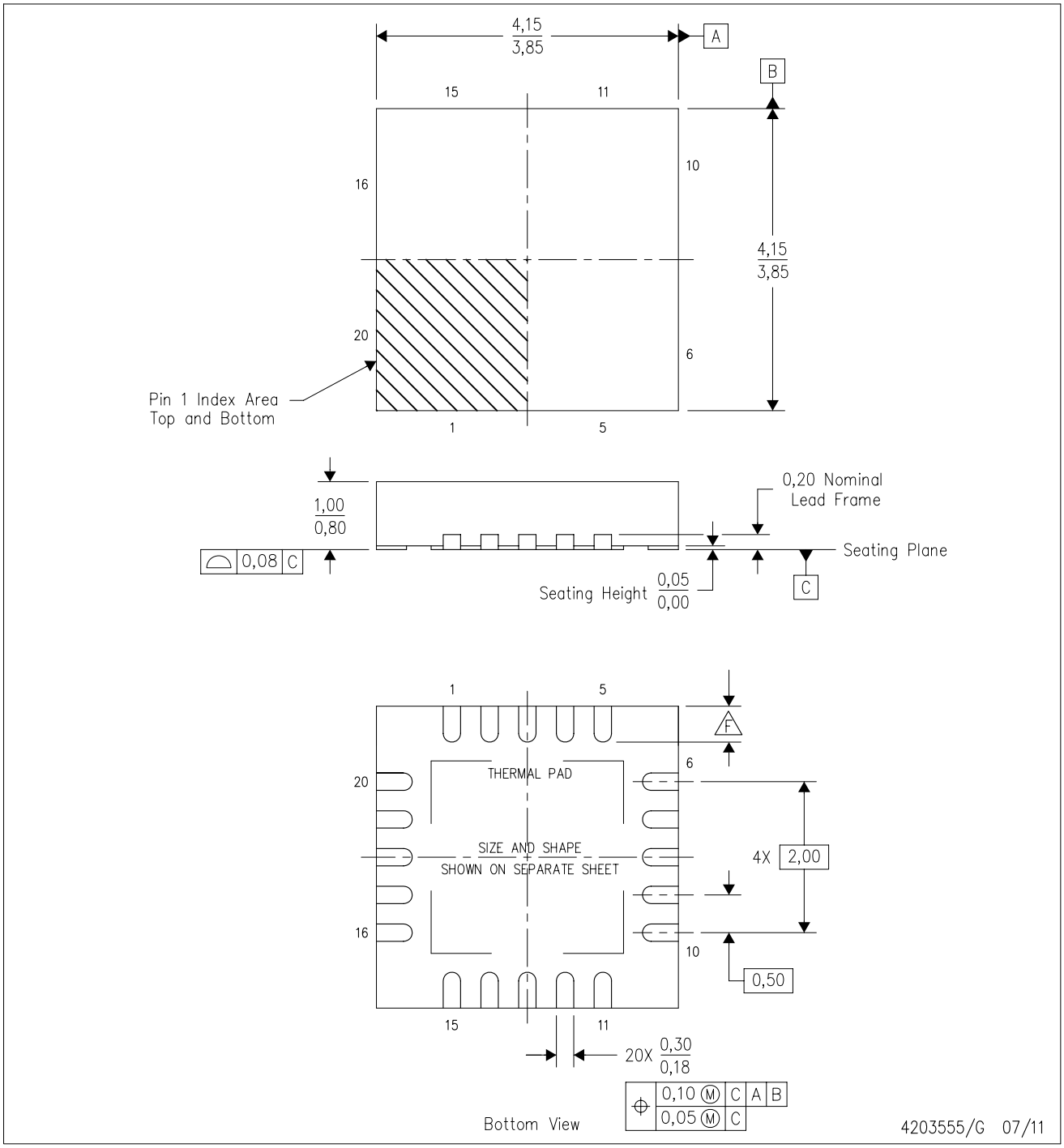

NOTES:
A. All linear dimensions are in millimeters. Dimensioning and tolerancing per ASME Y14.5M–1994.
B. This drawing is subject to change without notice.
C. QFN (Quad Flatpack No–Lead) package configuration.
D. The package thermal pad must be soldered to the board for thermal and mechanical performance.
E. See the additional figure in the Product Data Sheet for details regarding the exposed thermal pad features and dimensions.
F. Check thermal pad mechanical drawing in the product datasheet for nominal lead length dimensions.

RGP (S–PVQFN–N20) PLASTIC QUAD FLATPACK NO–LEAD

THERMAL INFORMATION

This package incorporates an exposed thermal pad that is designed to be attached directly to an external heatsink. The thermal pad must be soldered directly to the printed circuit board (PCB). After soldering, the PCB can be used as a heatsink. In addition, through the use of thermal vias, the thermal pad can be attached directly to the appropriate copper plane shown in the electrical schematic for the device, or alternatively, can be attached to a special heatsink structure designed into the PCB. This design optimizes the heat transfer from the integrated circuit (IC).

For information on the Quad Flatpack No–Lead (QFN) package and its advantages, refer to Application Report, QFN/SON PCB Attachment, Texas Instruments Literature No. SLUA271. This document is available at www.ti.com.

The exposed thermal pad dimensions for this package are shown in the following illustration.

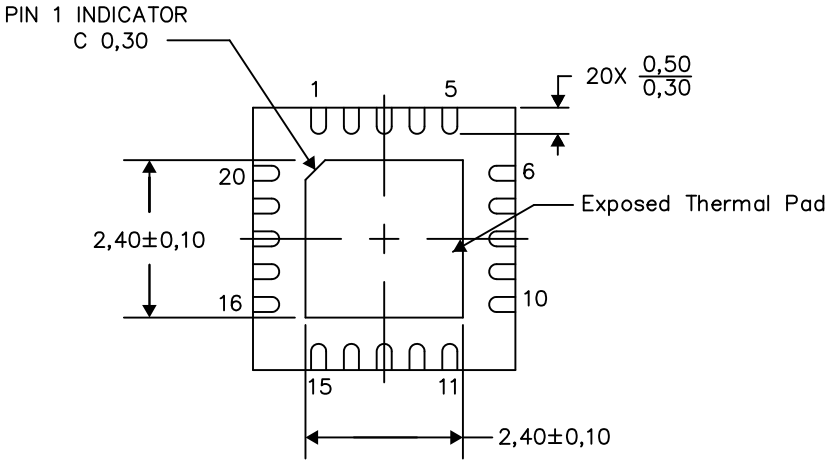

Bottom View

Exposed Thermal Pad Dimensions

4206346–7/Z 04/13

NOTES: A. All linear dimensions are in millimeters

RTK (S–PVQFN–N20) PLASTIC QUAD FLATPACK NO–LEAD

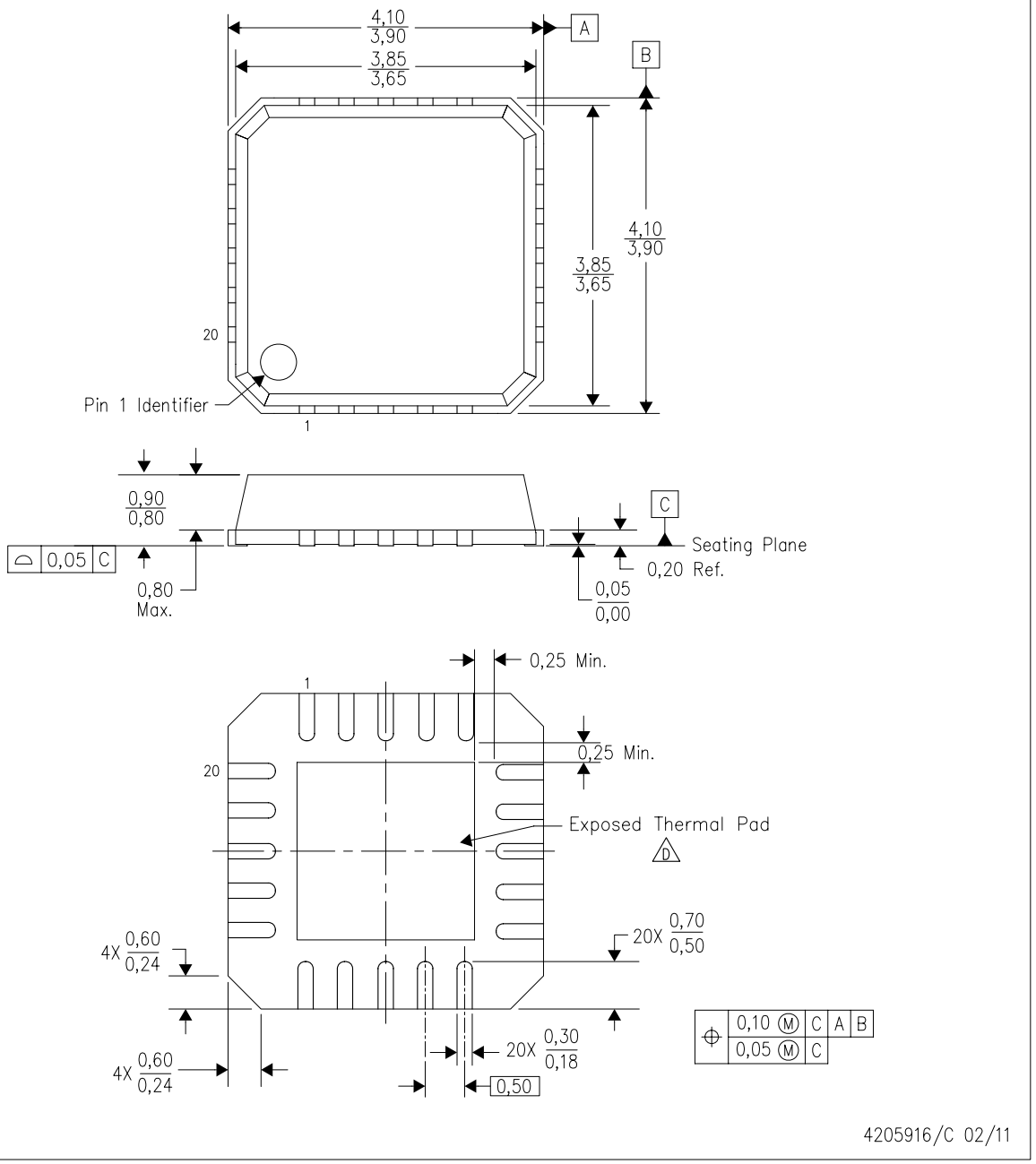

NOTES:
A. All linear dimensions are in millimeters. Dimensioning and tolerancing per ASME Y14.5–1994.
B. This drawing is subject to change without notice.
C. QFN (Quad Flatpack No–Lead) Package configuration.
D. The package thermal pad must be soldered to the board for thermal and mechanical performance. See the Product Data Sheet for details regarding the exposed thermal pad dimensions.

RTK (S–PVQFN–N20) PLASTIC QUAD FLATPACK NO–LEAD

THERMAL INFORMATION

This package incorporates an exposed thermal pad that is designed to be attached directly to an external heatsink. The thermal pad must be soldered directly to the printed circuit board (PCB). After soldering, the PCB can be used as a heatsink. In addition, through the use of thermal vias, the thermal pad can be attached directly to the appropriate copper plane shown in the electrical schematic for the device, or alternatively, can be attached to a special heatsink structure designed into the PCB. This design optimizes the heat transfer from the integrated circuit (IC).

For information on the Quad Flatpack No–Lead (QFN) package and its advantages, refer to Application Report, QFN/SON PCB Attachment, Texas Instruments Literature No. SLUA271. This document is available at www.ti.com.

The exposed thermal pad dimensions for this package are shown in the following illustration.

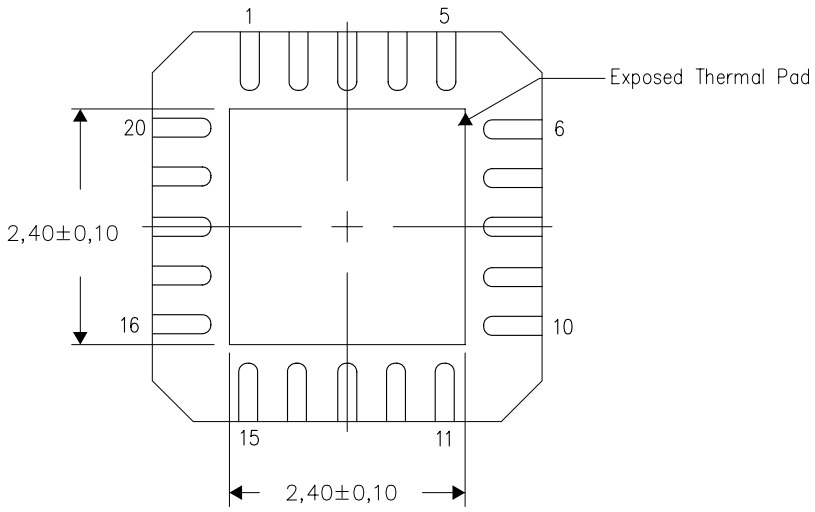

Bottom View

Exposed Thermal Pad Dimensions

4208000–3/G 02/11

NOTE: A. All linear dimensions are in millimeters

RTK (S–PVQFN–N20)

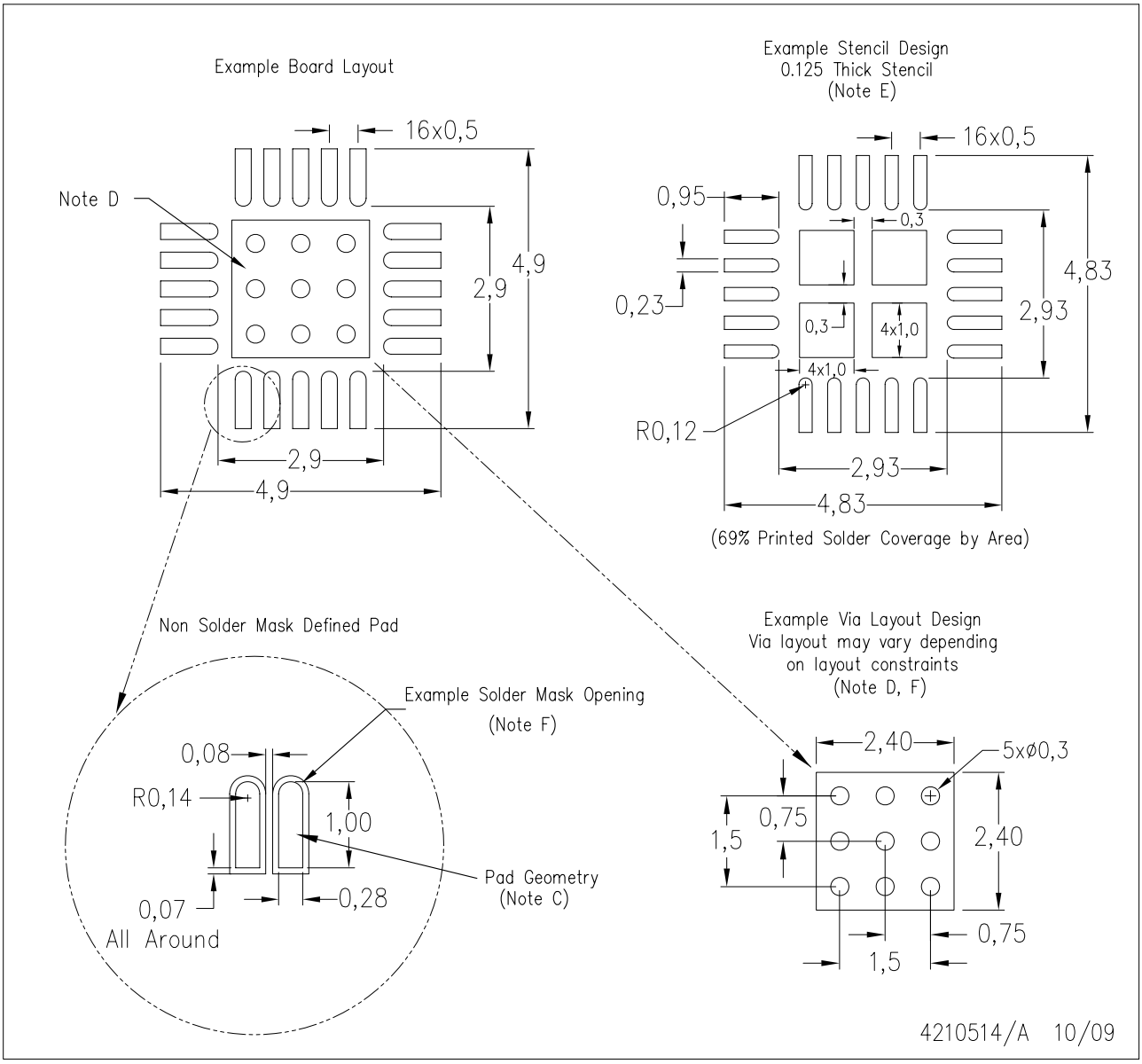

NOTES:
A. All linear dimensions are in millimeters.
B. This drawing is subject to change without notice.
C. Publication IPC–7351 is recommended for alternate designs.
D. This package is designed to be soldered to a thermal pad on the board. Refer to Application Note, Quad Flat–Pack Packages, Texas Instruments Literature No. SLUA271, and also the Product Data Sheets for specific thermal information, via requirements, and recommended board layout. These documents are available at www.ti.com <http://www.ti.com>.
E. Laser cutting apertures with trapezoidal walls and also rounding corners will offer better paste release. Customers should contact their board assembly site for stencil design recommendations. Refer to IPC 7525 for stencil design considerations.
F. Customers should contact their board fabrication site for recommended solder mask tolerances and via tenting recommendations for vias placed in the thermal pad.

IMPORTANT NOTICE

Texas Instruments Incorporated and its subsidiaries (TI) reserve the right to make corrections, enhancements, improvements and other changes to its semiconductor products and services per JESD46, latest issue, and to discontinue any product or service per JESD48, latest issue. Buyers should obtain the latest relevant information before placing orders and should verify that such information is current and complete. All semiconductor products (also referred to herein as “components”) are sold subject to TI’s terms and conditions of sale supplied at the time of order acknowledgment.

TI warrants performance of its components to the specifications applicable at the time of sale, in accordance with the warranty in TI’s terms and conditions of sale of semiconductor products. Testing and other quality control techniques are used to the extent TI deems necessary to support this warranty. Except where mandated by applicable law, testing of all parameters of each component is not necessarily performed.

TI assumes no liability for applications assistance or the design of Buyers’ products. Buyers are responsible for their products and applications using TI components. To minimize the risks associated with Buyers’ products and applications, Buyers should provide adequate design and operating safeguards.

TI does not warrant or represent that any license, either express or implied, is granted under any patent right, copyright, mask work right, or other intellectual property right relating to any combination, machine, or process in which TI components or services are used. Information published by TI regarding third-party products or services does not constitute a license to use such products or services or a warranty or endorsement thereof. Use of such information may require a license from a third party under the patents or other intellectual property of the third party, or a license from TI under the patents or other intellectual property of TI.

Reproduction of significant portions of TI information in TI data books or data sheets is permissible only if reproduction is without alteration and is accompanied by all associated warranties, conditions, limitations, and notices. TI is not responsible or liable for such altered documentation. Information of third parties may be subject to additional restrictions.

Resale of TI components or services with statements different from or beyond the parameters stated by TI for that component or service voids all express and any implied warranties for the associated TI component or service and is an unfair and deceptive business practice. TI is not responsible or liable for any such statements.

Buyer acknowledges and agrees that it is solely responsible for compliance with all legal, regulatory and safety-related requirements concerning its products, and any use of TI components in its applications, notwithstanding any applications-related information or support that may be provided by TI. Buyer represents and agrees that it has all the necessary expertise to create and implement safeguards which anticipate dangerous consequences of failures, monitor failures and their consequences, lessen the likelihood of failures that might cause harm and take appropriate remedial actions. Buyer will fully indemnify TI and its representatives against any damages arising out of the use of any TI components in safety-critical applications.

In some cases, TI components may be promoted specifically to facilitate safety-related applications. With such components, TI’s goal is to help enable customers to design and create their own end-product solutions that meet applicable functional safety standards and requirements. Nonetheless, such components are subject to these terms.

No TI components are authorized for use in FDA Class III (or similar life-critical medical equipment) unless authorized officers of the parties have executed a special agreement specifically governing such use.

Only those TI components which TI has specifically designated as military grade or “enhanced plastic” are designed and intended for use in military/aerospace applications or environments. Buyer acknowledges and agrees that any military or aerospace use of TI components which have ***not*** been so designated is solely at the Buyer's risk, and that Buyer is solely responsible for compliance with all legal and regulatory requirements in connection with such use.

TI has specifically designated certain components as meeting ISO/TS16949 requirements, mainly for automotive use. In any case of use of non-designated products, TI will not be responsible for any failure to meet ISO/TS16949.

Products		**Applications**	
Audio	www.ti.com/audio	Automotive and Transportation	www.ti.com/automotive
Amplifiers	amplifier.ti.com	Communications and Telecom	www.ti.com/communications
Data Converters	dataconverter.ti.com	Computers and Peripherals	www.ti.com/computers
DLP® Products	www.dlp.com	Consumer Electronics	www.ti.com/consumer-apps
DSP	dsp.ti.com	Energy and Lighting	www.ti.com/energy
Clocks and Timers	www.ti.com/clocks	Industrial	www.ti.com/industrial
Interface	interface.ti.com	Medical	www.ti.com/medical
Logic	logic.ti.com	Security	www.ti.com/security
Power Mgmt	power.ti.com	Space, Avionics and Defense	www.ti.com/space-avionics-defense
Microcontrollers	microcontroller.ti.com	Video and Imaging	www.ti.com/video
RFID	www.ti-rfid.com		
OMAP Applications Processors	www.ti.com/omap	**TI E2E Community**	e2e.ti.com
Wireless Connectivity	www.ti.com/wirelessconnectivity		

Mailing Address: Texas Instruments, Post Office Box 655303, Dallas, Texas 75265
Copyright © 2013, Texas Instruments Incorporated